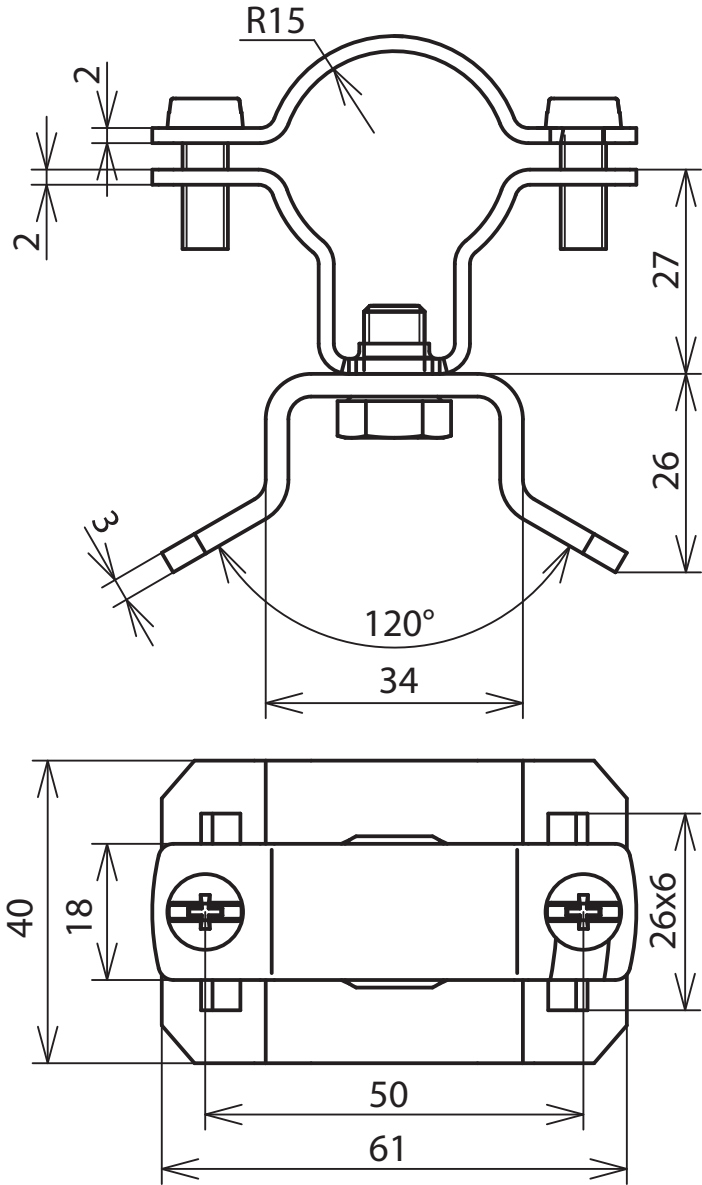
R15
2
2
27
26
3
120°
34
40
18
26x6
50
61