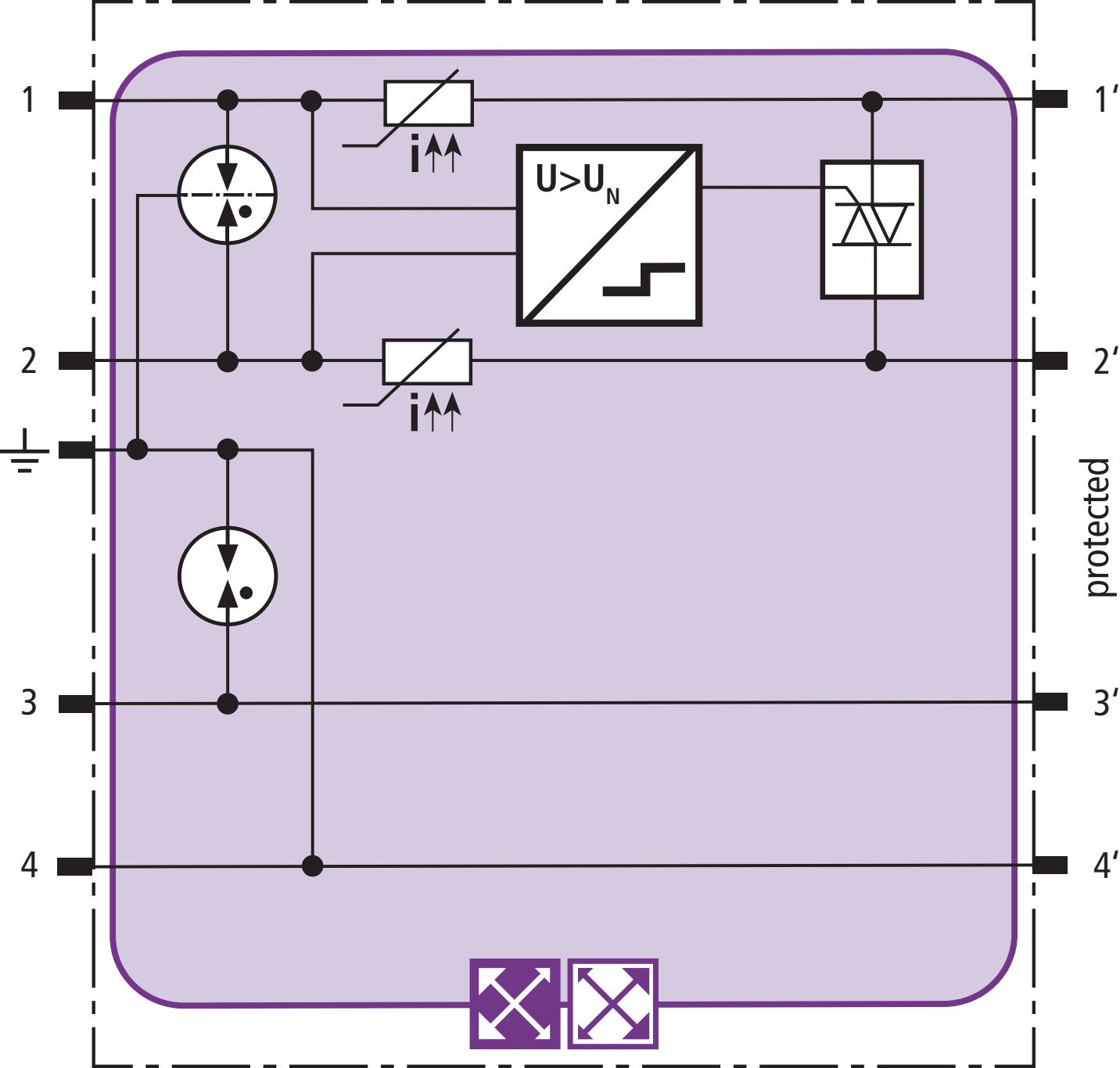
1
1'
2
2'
3
3'
4
4'
i
i
U>U
N
protected