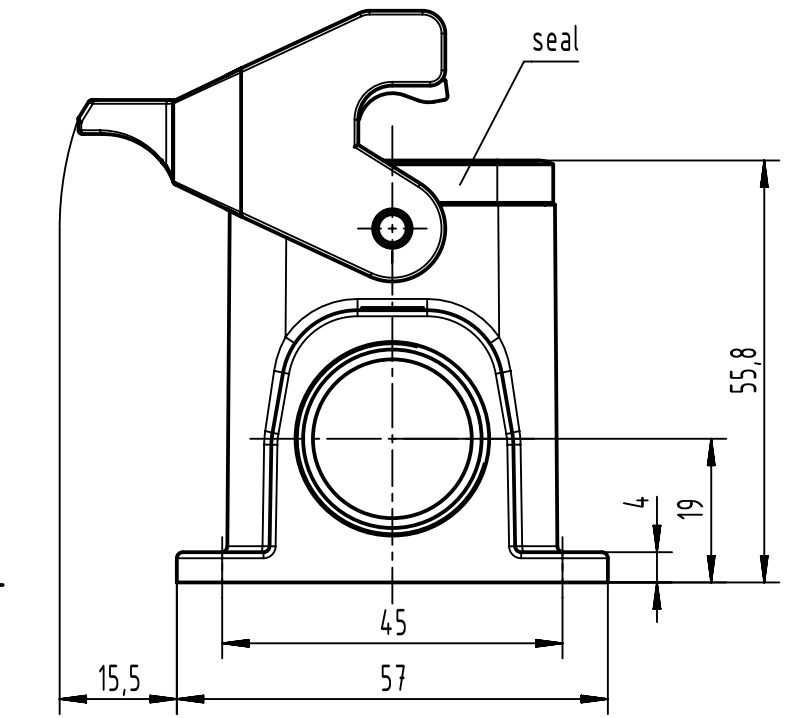

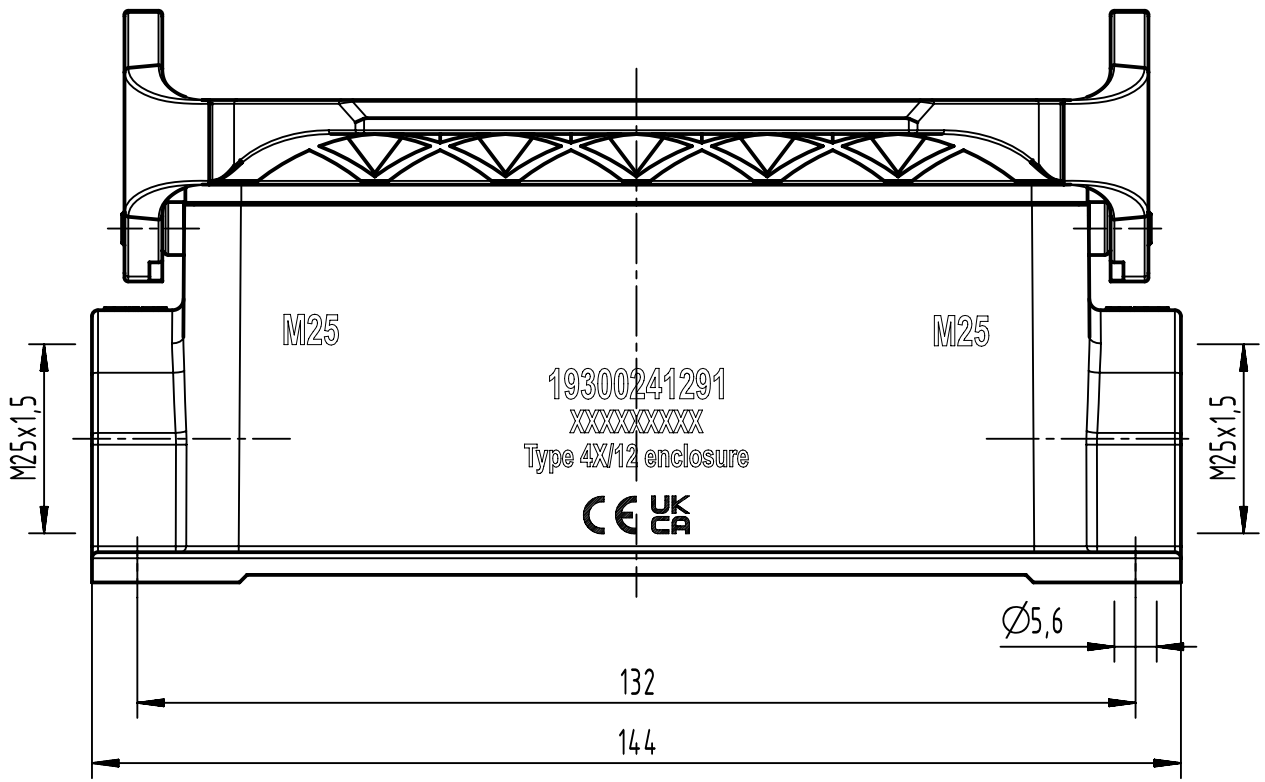

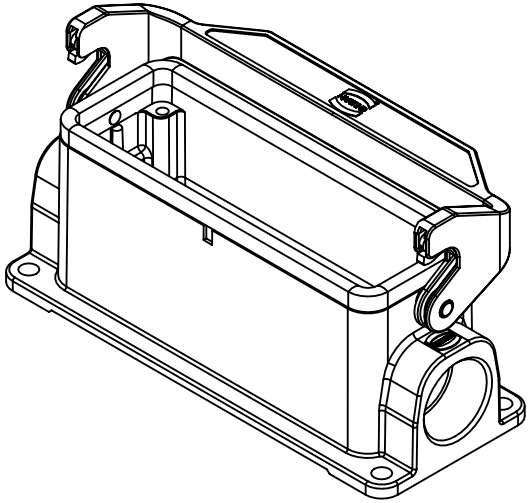

All Dimensions in mm Original Size DIN A4	Scale 1:1	Free size tol.		Ref. Sub. TB 19 30 024 1291 v. 06.01.04	
All rights reserved Department EL PD	Created by SPREENB	Inspected by GERB	Standardisation	Date 2023-12-11	State Final Release
HARTING D-32339 Espelkamp	Title Han B Base Surface LC 1 Lever 2 x M25				Doc-Key / ECM-Nr. 100091382/UGD/005/D 500000255805
	Type TB	Number 19 30 024 1291		Rev. D	Page 1/1

A4