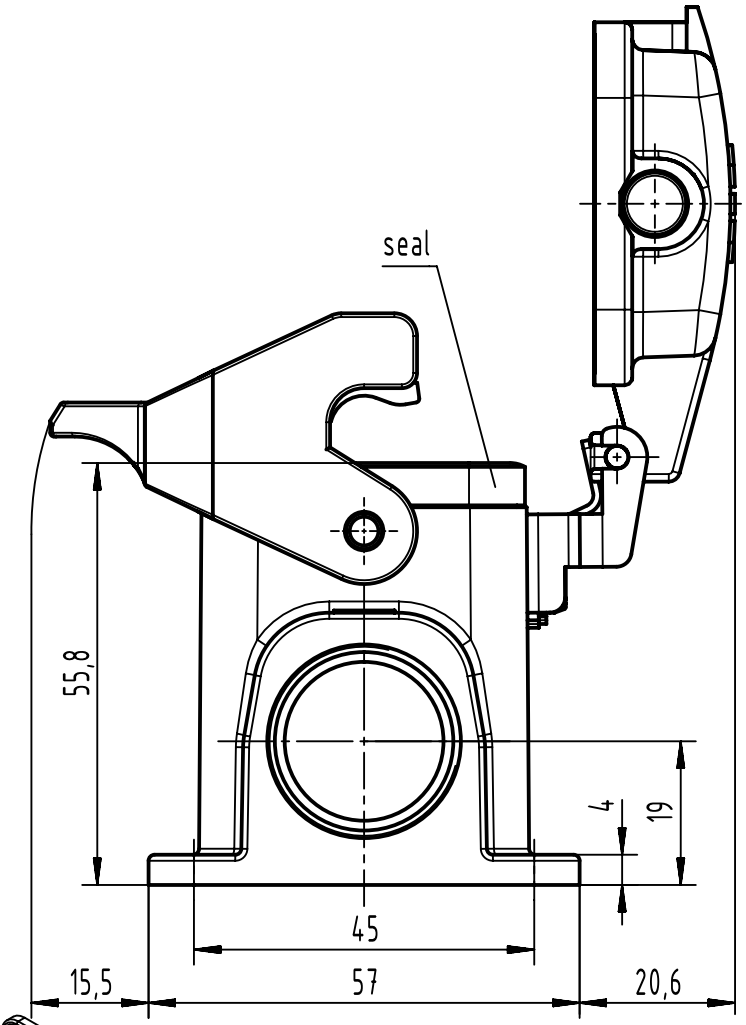

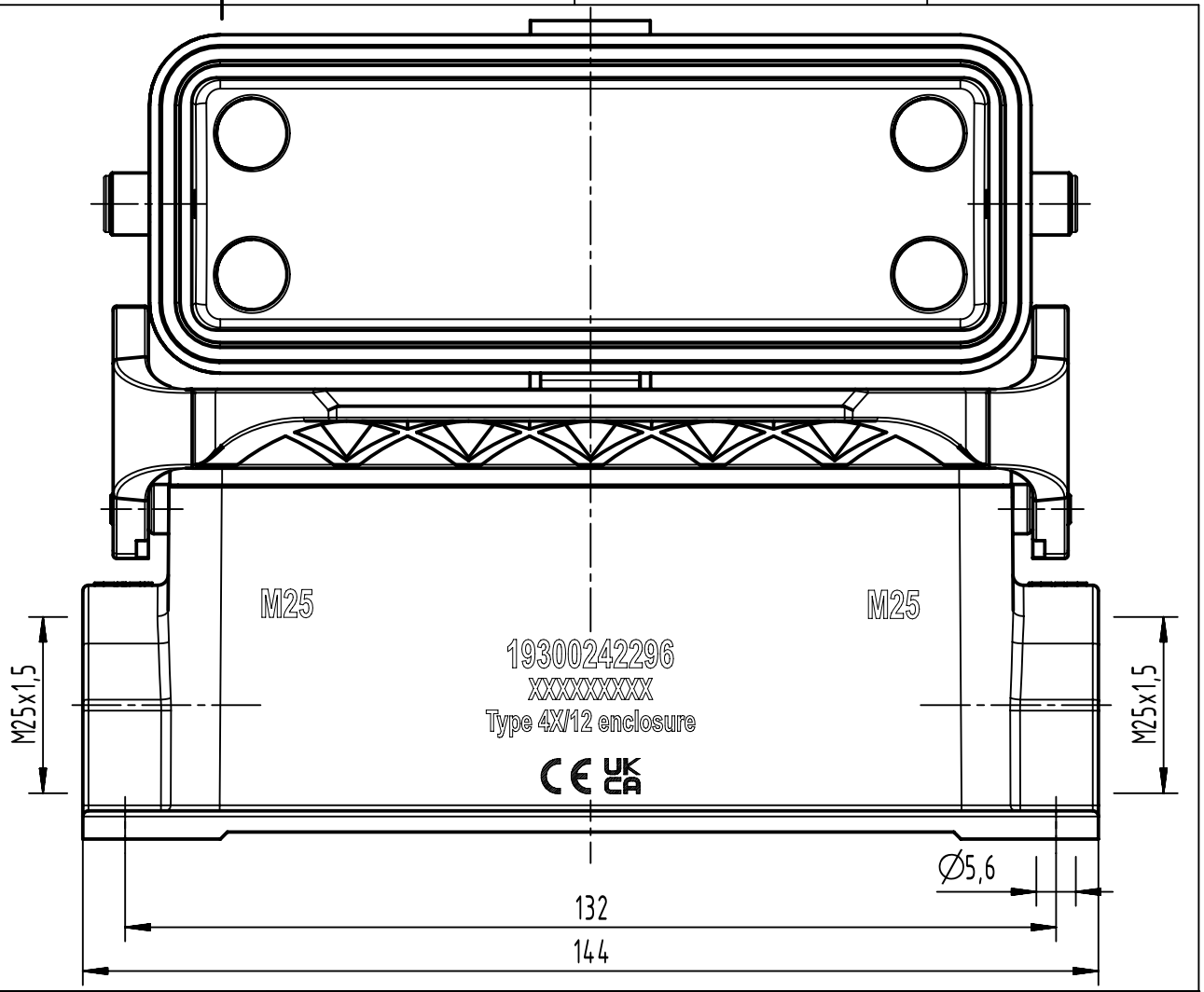

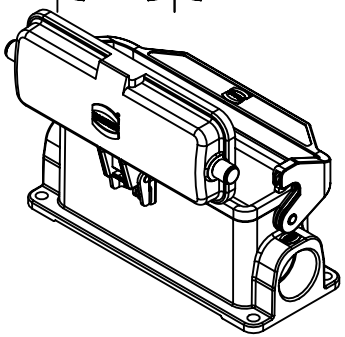

All Dimensions in mm Original Size DIN A4	Scale 1:1	Free size tol.		Ref. Sub. TB 19 30 024 2296 v. 15.12.08	
All rights reserved Department EL PD	Created by SPREENB	Inspected by GERB	Standardisation	Date 2023-12-11	State Final Release
HARTING D-32339 Espelkamp	Title Han B Base SM LC Metal Cover 2xM25				Doc-Key / ECM-Nr. 100125816/UGD/006/D 500000255805
	Type TB	Number 19 30 024 2296		Rev. D	Page 1/1

A4