BRUMBERG
Light. Since 1873.

BIRO CIRCLE LED pendant ring light, direct, dimmable

Article no. 13556184

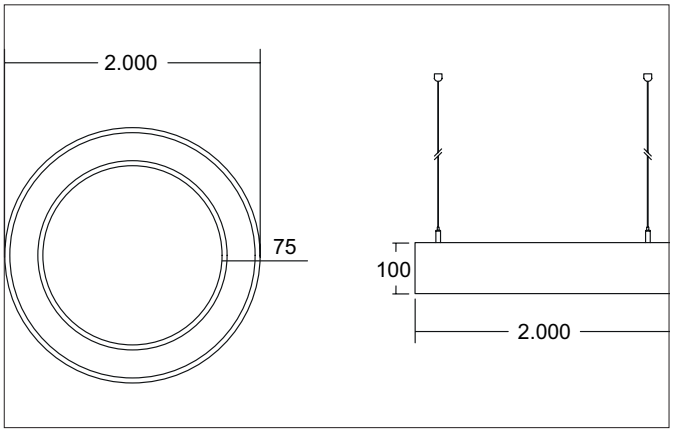

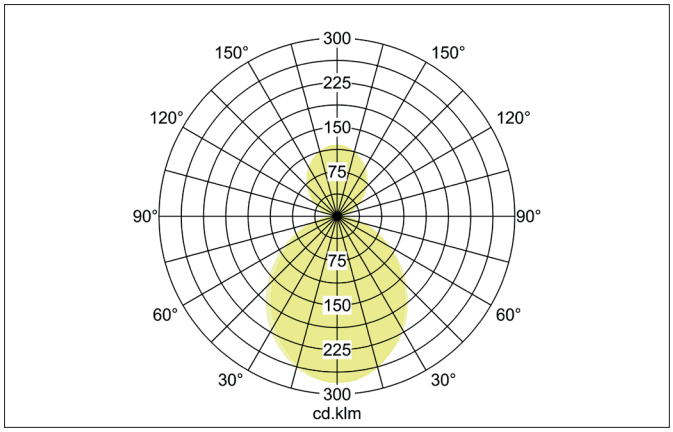

Tender

LED pendant ring light, direct, dimmable, Round.Luminaire diameter 2000.0 mm, Hight 100.0 mm, for pendulum mounting. Pendulum length max. 5000.0 mm Weight 15.0 kg, with rotattionssymmetrical, deep, wide distributed light intensity. Cover plastic, opalLuminous flux 23.732 lm, Power 1 x 210 W, Light colour neutral white, Correlated color temprature (CCT) 4.000 K, Colour rendering index CRI > 90, Rated life time L70/B50 at 25 °C: 276.000 h, Rated life time L80/B20 at 25 °C: 153.000 h, Housing material: Aluminium / Steel / Plastic, Colour: black structure, Permissible ambient temperature (ta): -20 °C up to +25 °C, Protection class (EN 61140): I, Degree of protection (DIN EN 60529): IP20. With electronic driver, DALI-DT6 dimmable.

Article data	
Article no.	13556184
GTIN	4251433964964
Series name	BIRO CIRCLE
Short description	LED pendant ring light, direct, dimmable
Material	Aluminium / Steel / Plastic
Colour	black structure
Type of surface	Structure
Shape	Round
Outer diameter	2000 mm
Hight	100 mm
Scope of delivery	incl. converter for connection to 230 V mains voltage
Weight	15 kg
Length of the connection line	5,000 mm
D licence plate	No
Conformance	CE, UKCA

All technical data as well as, weight and measurements are based on rated values and had been carefully prepared. We reserve the right to make technical changes which are are important in progressing. Product pictures are examples and can vary from the original. Subject to errors.
Date 10.02.2026 Orders are placed under our general terms and conditions under https://www.brumberg.com/en/terms-and-conditions/general-terms-and-conditions-of-sale/

BRUMBERG
Light. Since 1873.

BIRO CIRCLE LED pendant ring light, direct, dimmable

Article no. 13556184

Lighting technology	
Colour temperature	4.000 K
Light colour	white
Light output	Direct/Indirect
Luminous flux	23,732 lm
Luminous flux component (direct / indirect)	70/30 %
System efficiency	113 lm/W
McAdam-Step	McAdam-Step 3
Colour rendering	CRI > 90
Reflector	Without
Beam angle	110°
Light sharing	Symmetric
Adjustable color temperature	No

Operating technology of the luminaire	
System output	210 W
Voltage type	AC/DC
AC nominal voltage max	230 V
Frequency max	50 Hz
Lamp	LED
Lamp holder	Without fitting
Protection class	I
Degree of protection	IP20
Dimmable	Yes
Control	DALI-DT6
Length of the connection line	5,000 mm
Bulb change possible	The light source of this luminaire may only be replaced by the manufacturer or a service technician commissioned by him or a similarly qualified person.
Rated life time L70/B50 at 25 °C	276,000 h
Rated life time L80/B20 at 25 °C	153.000 h
Rated life time L90/B10 at 25 °C	74.000 h
Energy efficiency class	not required

Mounting technology	
Mounting method	Suspended
Place of installation	Ceiling-mounted
Adjustability	Not adjustable
Pendulum length max.	5,000 mm
Pendant length single suspension	500 - 5.000 mm
Pendulum length centre canopy	1000 - 10000 mm
Number of cable suspensions	6
Material cover	Plastic, opal

Packing data	
Gross weight	17 kg
Length of packaging	2,030 mm
Packaging width	2,030 mm
Packaging hight	110 mm
Disposal at end of life	This product must not be disposed of with household waste. You are obliged, to dispose of such electrical waste separately. By disposing of electrical waste and other old or defective electronics separately, you support recycling or other forms of re-use. In that way you help to take care and to avoid that harmful substances get into the environment.

All technical data as well as, weight and measurements are based on rated values and had been carefully prepared. We reserve the right to make technical changes which are are important in progressing. Product pictures are examples and can vary from the original. Subject to errors.
Date 10.02.2026 Orders are placed under our general terms and conditions under https://www.brumberg.com/en/terms-and-conditions/general-terms-and-conditions-of-sale/