BRUMBERG
Light. Since 1873.

# BB03 LED recessed spot set, DALI dimmable, incl. connection box

Article no. 41463183

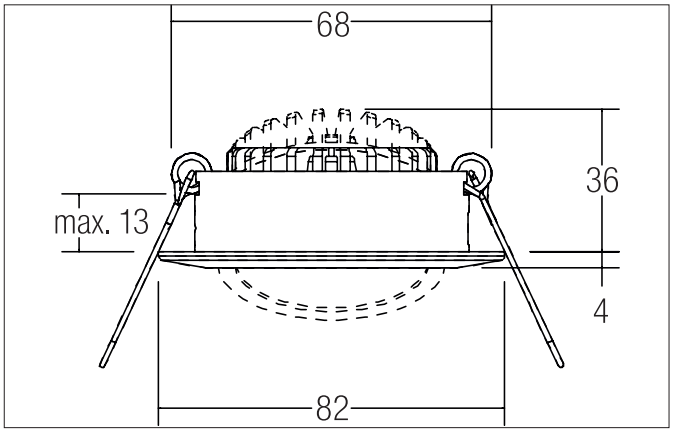


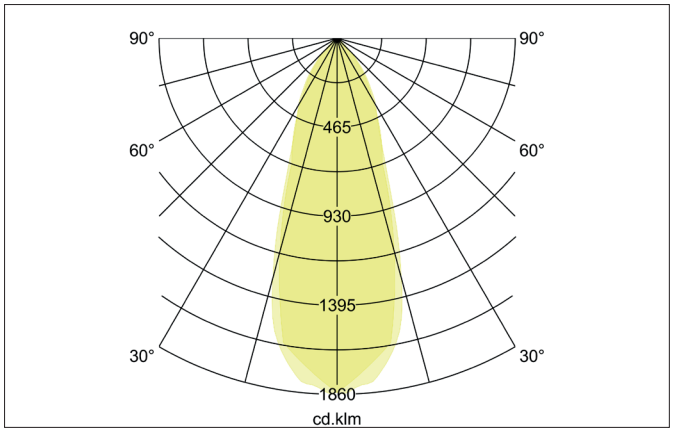


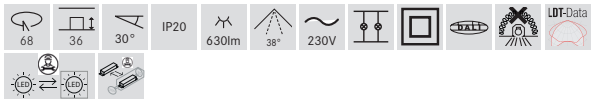


## Tender

LED recessed spot set, DALI dimmable, incl. connection box, Round.Toolless ceiling installation by installation springs. Ceiling cut-out Ø 68 mm, Installation depth 36 mm, Outer diameter 82 mm, Weight 0,247 kg, Reflector silver with rotattionssymmetrical, deep, wide distributed light intensity. Cover polycarbonat clearLuminous flux 630 lm, Power 1 x 6 W, Light colour warm white, Correlated color temprature (CCT) 3.000 K, Colour rendering index CRI > 80, Rated life time L80/B20 at 25 °C: 50.000 h, Housing material: Aluminium / Polycarbonate, Colour: black structure, Permissible ambient temperature (ta): -20 °C up to +25 °C, Protection class (EN 61140): II, Degree of protection (DIN EN 60529): IP20. With electronic driver, DALI-2 dimmable.

**Product Benefits**

- LED recessed spotlight in round aluminum design
  with LED module 6 W (3,000 K) and DALI dimmable converter.
- Connection box 5-pole included in scope of delivery.
- Ceiling cut-out 68 mm, diameter 82 mm, installation depth 36 mm, IP20.
- Swivel range 30°.
- Without visible snap ring.
- Classic, minimalist design.
- Also available as a switchable or phase-dimmable set with the same look.
- Also available with the same surface structure and in the same color
  also available in a square version.

All technical data as well as, weight and measurements are based on rated values and had been carefully prepared. We reserve the right to make technical changes which are are important in progressing. Product pictures are examples and can vary from the original. Subject to errors.
Date 21.11.2025 Orders are placed under our general terms and conditions under https://www.brumberg.com/en/terms-and-conditions/general-terms-and-conditions-of-sale/

BRUMBERG
Light. Since 1873.

## BB03 LED recessed spot set, DALI dimmable, incl. connection box

Article no. 41463183

| Article data | |
|---|---|
| Article no. | 41463183 |
| GTIN | 4251433954132 |
| Series name | BB03 |
| Short description | LED recessed spot set, DALI dimmable, incl. connection box |
| Material | Aluminium / Polycarbonate |
| Colour | black structure |
| Type of surface | Structure |
| Shape | Round |
| Outer diameter | 82 mm |
| Built-in diameter min. | 68 mm |
| Built-in diameter max. | 68 mm |
| Installation depth | 36 mm |
| Hight | 4 mm |
| Scope of delivery | Incl. 5-pole connection box |
| Weight | 0.247 kg |
| D licence plate | No |
| Conformance | CE, UKCA |

| Lighting technology | |
|---|---|
| Colour temperature | 3.000 K |
| Light colour | white |
| Light output | Direct |
| Luminous flux | 630 lm |
| System efficiency | 105 lm/W |
| Colour rendering | CRI > 80 |
| Reflector | Faceted |
| Reflector colour | silver |
| Beam angle | 38° |
| Light sharing | Symmetric |
| Adjustable color temperature | No |

| Operating technology of the luminaire | |
|---|---|
| System output | 6 W |
| Voltage type | AC |
| AC nominal voltage max | 230 V |
| Frequency max | 50 Hz |
| Lamp | LED |
| Lamp holder | Without fitting |
| Protection class | II |
| Degree of protection | IP20 |
| Dimmable | Yes |
| Control | DALI-2 |
| Bulb change possible | The light source of this luminaire may only be replaced by the manufacturer or a service technician commissioned by him or a similarly qualified person. |
| Rated life time L80/B20 at 25 °C | 50.000 h |
| Energy efficiency class | not required |

| Mounting technology | |
|---|---|
| Mounting method | Recessed mounting |
| Place of installation | Ceiling-mounted |
| Adjustability | Pivoted |
| Swivel angle | 30° |
| Max. ceiling thickness | 13 mm |
| Further references | No cover with thermal insulation material |
| Material cover | Polycarbonat clear |
| Suitable for through-wiring | Yes |

All technical data as well as, weight and measurements are based on rated values and had been carefully prepared. We reserve the right to make technical changes which are are important in progressing. Product pictures are examples and can vary from the original. Subject to errors.
Date 21.11.2025 Orders are placed under our general terms and conditions under https://www.brumberg.com/en/terms-and-conditions/general-terms-and-conditions-of-sale/

BRUMBERG
Light. Since 1873.

## BB03 LED recessed spot set, DALI dimmable, incl. connection box

Article no. 41463183

| Packing data | |
|---|---|
| Gross weight | 0.322 kg |
| Length of packaging | 140 mm |
| Packaging width | 110 mm |
| Packaging hight | 120 mm |
| Disposal at end of life | This product must not be disposed of with household waste. You are obliged, to dispose of such electrical waste separately.<br>By disposing of electrical waste and other old or defective electronics separately, you support recycling or other forms of re-use. In that way you help to take care and to avoid that harmful substances get into the environment. |

| Optional accessories |
|---|
| Article no.: 81201180<br>Reducing ring D 110 mm, for luminaire cut-out size 68 mm<br><br>Dimensions: 110 mm<br>https://www.brumberg.com/fileadmin/products/Datenblatt_81201180_2021_DE.pdf |
| Article no.: 81202180<br>Reducing ring D 130 mm, for luminaire cut-out size 68 mm<br><br>Dimensions: 130 mm<br>https://www.brumberg.com/fileadmin/products/Datenblatt_81202180_2021_DE.pdf |
| Article no.: 81203180<br>Reducing ring D 145 mm, for luminaire cut-out size 68 mm<br><br>Dimensions: 145 mm<br>https://www.brumberg.com/fileadmin/products/Datenblatt_81203180_2021_DE.pdf |
| Article no.: 5327<br>Leaf spring set<br><br>https://www.brumberg.com/fileadmin/products/Datenblatt_00532700_2021_DE.pdf |

All technical data as well as, weight and measurements are based on rated values and had been carefully prepared. We reserve the right to make technical changes which are are important in progressing. Product pictures are examples and can vary from the original. Subject to errors.
Date 21.11.2025 Orders are placed under our general terms and conditions under https://www.brumberg.com/en/terms-and-conditions/general-terms-and-conditions-of-sale/