BRUMBERG
Light. Since 1873.

LAVILO II MINI LED Wallwasher, IP66

Article no. 60882647

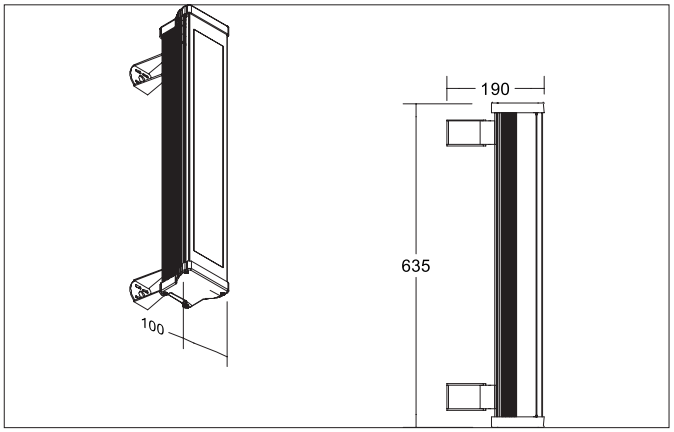

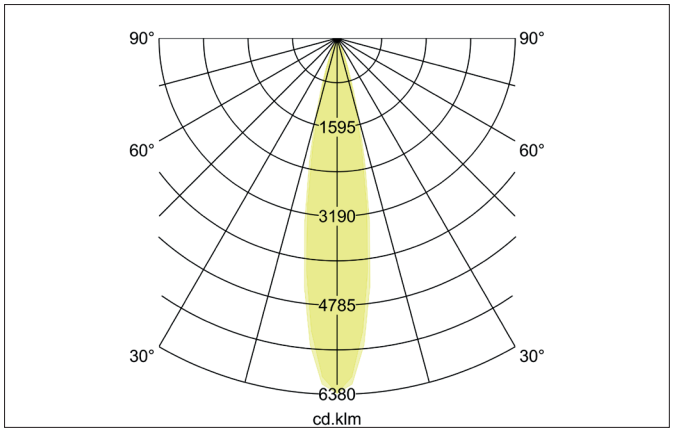

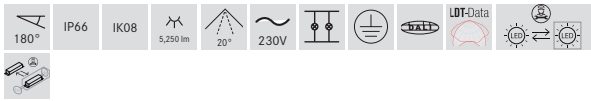

Tender
LED Wallwasher, IP66, Rectangular.Luminaire length 635.0 mm, Luminaire width 114.0 mm, Hight 97.0 mm Weight 5.3 kg, with rotattions-symmetrical, deep, wide distributed light intensity. Cover glass transparentLuminous flux 5.250 lm, Power 1 x 42 W, Light colour warm white, Correlated color temprature (CCT) 2.700 K, Colour rendering index CRI > 80, Housing material: Aluminium / Glass, Colour: titanium matt, Permissible ambient temperature (ta): -25 °C up to +50 °C, Protection class (EN 61140): I, Degree of protection (DIN EN 60529): IP66, shock resistance according to IEC62262: IK08 .With electronic driver, DALI-DT6 dimmable.

Article data	
Article no.	60882647
GTIN	4251433992912
Series name	LAVILO II MINI
Short description	LED Wallwasher, IP66
Material	Aluminium / Glass
Colour	titanium matt
Type of surface	Matt
Shape	Rectangular
Length	635 mm
Width	114 mm
Hight	97 mm
Scope of delivery	incl. converter for connection to 230 V mains voltage, DALI.
Weight	5.3 kg
D licence plate	No
Conformance	CE, UKCA

All technical data as well as, weight and measurements are based on rated values and had been carefully prepared. We reserve the right to make technical changes which are are important in progressing. Product pictures are examples and can vary from the original. Subject to errors.
Date 26.05.2026 Orders are placed under our general terms and conditions under https://www.brumberg.com/en/terms-and-conditions/general-terms-and-conditions-of-sale/

BRUMBERG
Light. Since 1873.

LAVILO II MINI LED Wallwasher, IP66
Article no. 60882647

Lighting technology	
Colour temperature	2.700 K
Light colour	white
Light output	Direct
Luminous flux	5,250 lm
System efficiency	125 lm/W
McAdam-Step	McAdam-Step 5
Colour rendering	CRI > 80
Luminaire optics	Lens
Beam angle	20°
Light sharing	Symmetric
Adjustable color temperature	No

Operating technology of the luminaire	
System output	42 W
Voltage type	AC
AC nominal voltage max	230 V
Frequency max	50 Hz
Frequency min	50 Hz
Lamp	LED
Lamp holder	Without fitting
Protection class	I
Degree of protection	IP66
Ambient temperature	-25°C up to +50°C
Dimmable	Yes
Control	DALI-DT6
Design of the connecting cable	side connection cable
Bulb change possible	The light source of this luminaire may only be replaced by the manufacturer or a service technician commissioned by him or a similarly qualified person.
Rated life time L90/B10 at 25 °C	50.000 h
Energy efficiency class	not required

Mounting technology	
Mounting method	Surface mounting
Place of installation	Wall-mounted
Adjustability	Pivoted
Swivel angle	180°
Impact resistance	IK08
Cover	Glass transparent
Suitable for through-wiring	No

Packing data	
Gross weight	5.8 kg
Length of packaging	685 mm
Packaging width	160 mm
Packaging hight	140 mm
Disposal at end of life	This product must not be disposed of with household waste. You are obliged, to dispose of such electrical waste separately. By disposing of electrical waste and other old or defective electronics separately, you support recycling or other forms of re-use. In that way you help to take care and to avoid that harmful substances get into the environment.

All technical data as well as, weight and measurements are based on rated values and had been carefully prepared. We reserve the right to make technical changes which are are important in progressing. Product pictures are examples and can vary from the original. Subject to errors.
Date 26.05.2026 Orders are placed under our general terms and conditions under https://www.brumberg.com/en/terms-and-conditions/general-terms-and-conditions-of-sale/