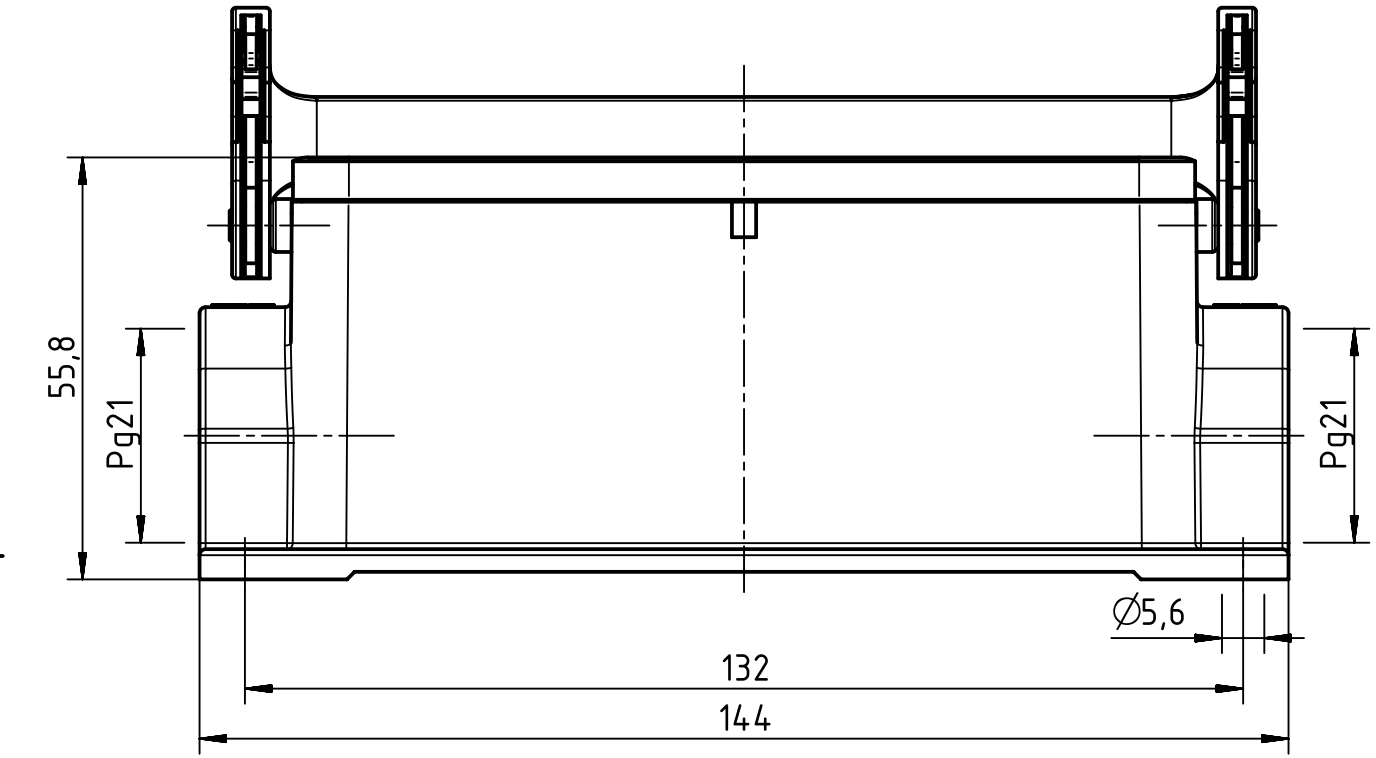

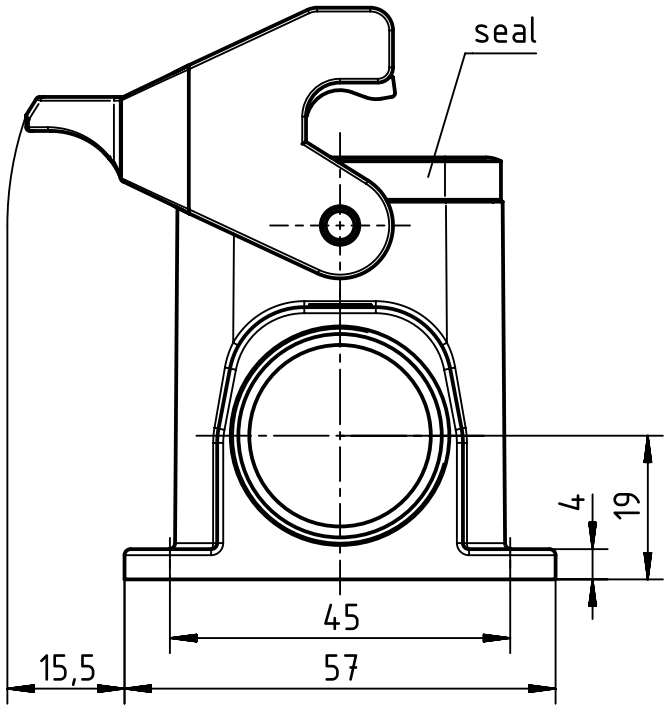

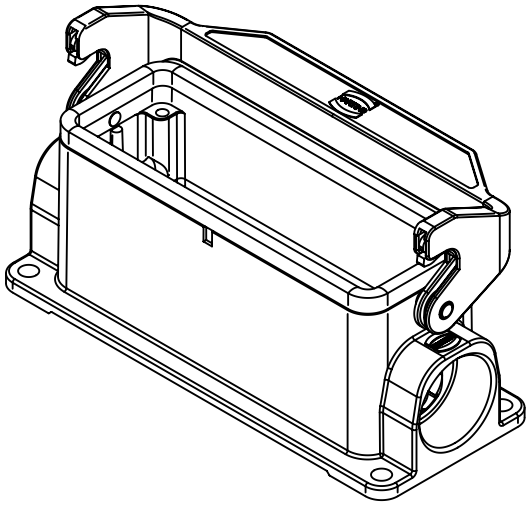

All Dimensions in mm Original Size DIN A4	Scale 1:1	Free size tol.		Ref. Sub. TB 09 30 024 1290 v. 01.02.93	
All rights reserved Department EL PD - DE	Created by HOLLERT	Inspected by BERGHORN	Standardisation SCHMIDTM	Date 2015-09-25	State Final Release
	Title Han 24 B-asg2-LB-21				Doc-Key / ECM-Nr. 100088377/UGD/005/A 500000084504
HARTING Electric GmbH & Co. KG D-32339 Espelkamp	Type TB	Number 09 30 024 1290		Rev. A	Page 1/1

A4