panel cut out

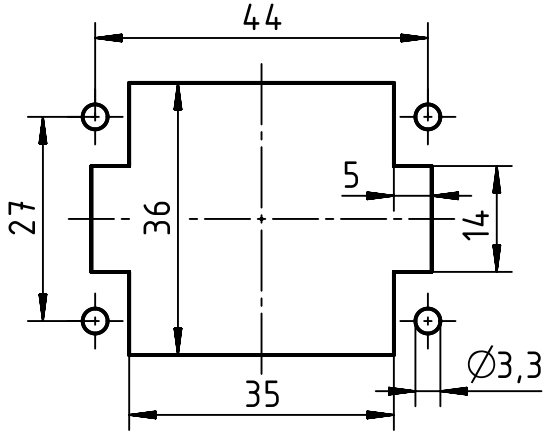

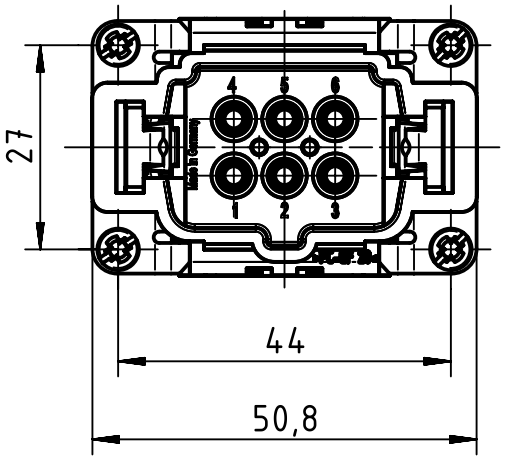

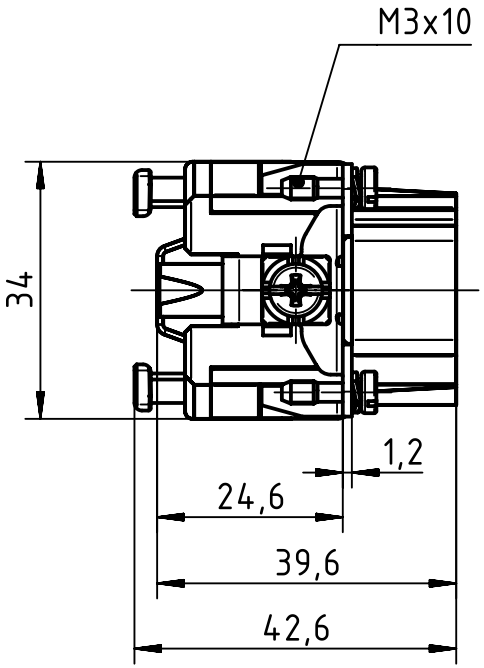

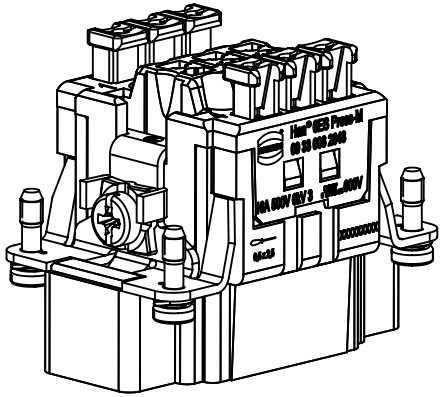

All Dimensions in mm Original Size DIN A4	Scale 1:1	Free size tol.		Ref. Sub.	
All rights reserved Department EL PD - DE	Created by MEYERLE	Inspected by RUETERA	Standardisation TIEMANNA	Date 2017-11-03	State Final Release
HARTING Electric GmbH & Co. KG D-32339 Espelkamp	Title Han 6ES Press - M				Doc-Key / ECM-Nr. 100616097/UGD/001/D 500000127032
	Type TB	Number 09 33 006 2648		Rev. D	Page 1/1

A4