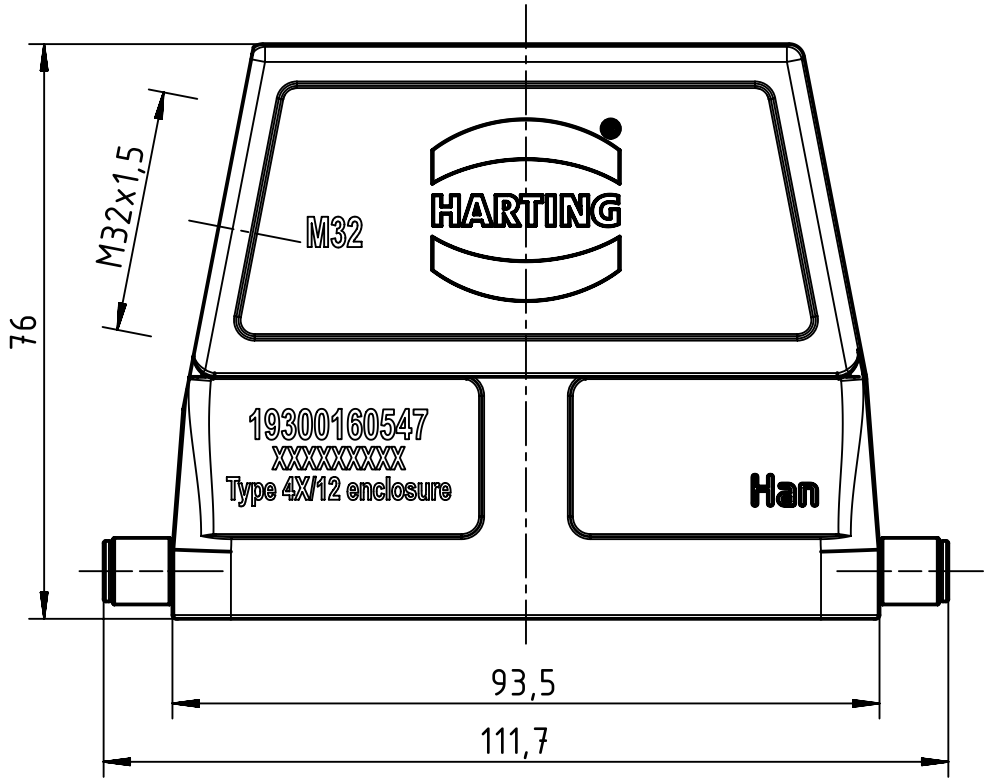

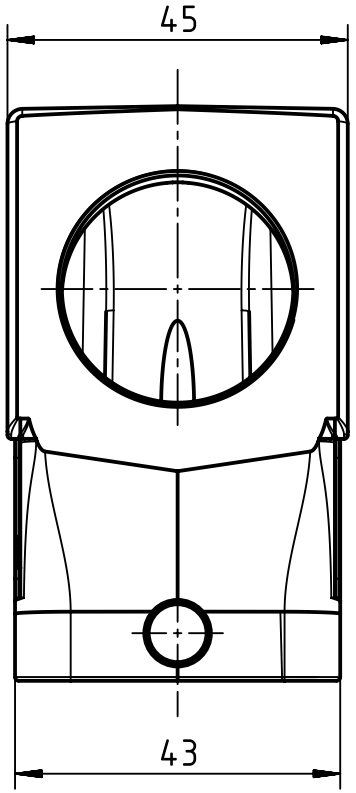

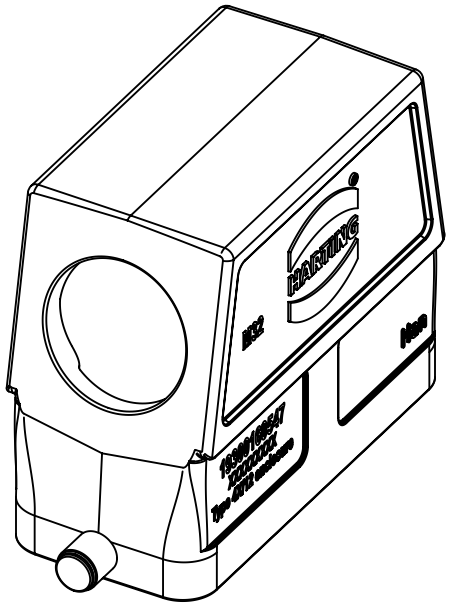

All Dimensions in mm Original Size DIN A4	Scale 1:1	Free size tol.		Ref. Sub.	
All rights reserved Department EL PD - DE	Created by GRUBES	Inspected by TIEMANNA	Standardisation SCHMIDTM	Date 2016-04-29	State Final Release
HARTING Electric GmbH & Co. KG D-32339 Espelkamp	Title Han B Hood Side Entry 2 Reels M32				Doc-Key / ECM-Nr. 100222765/UGD/002/C 500000103220
	Type TB	Number 19 30 016 0547		Rev. C	Page 1/1

A4