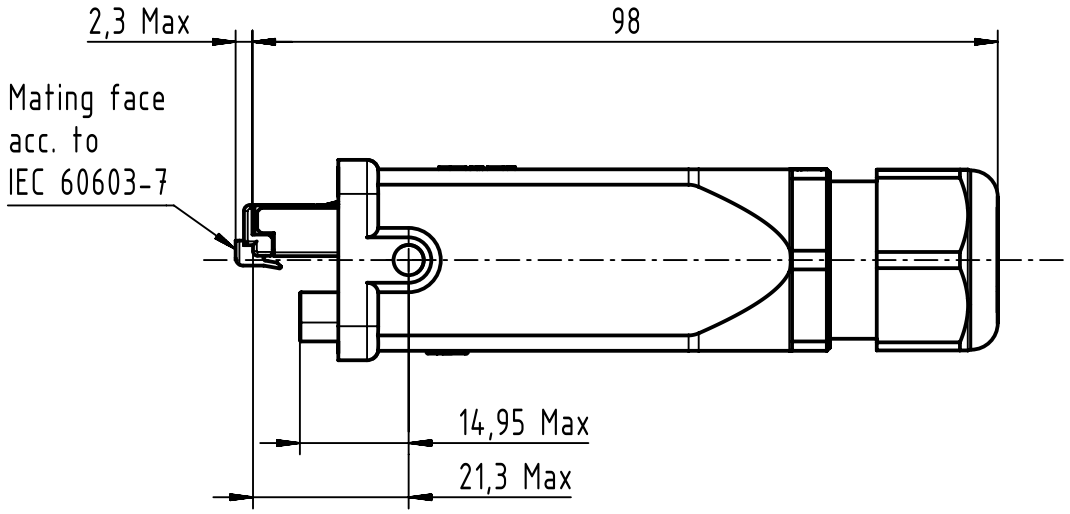

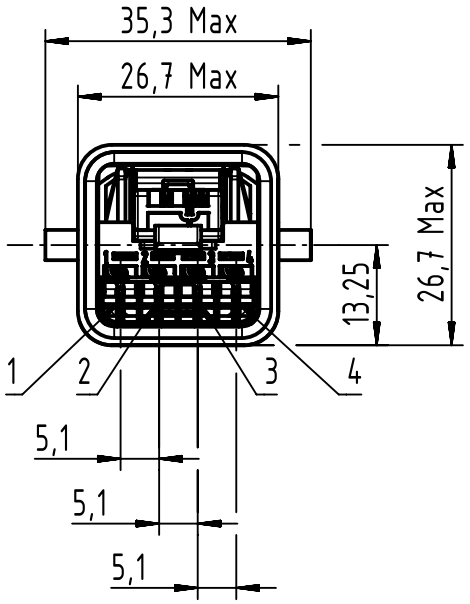

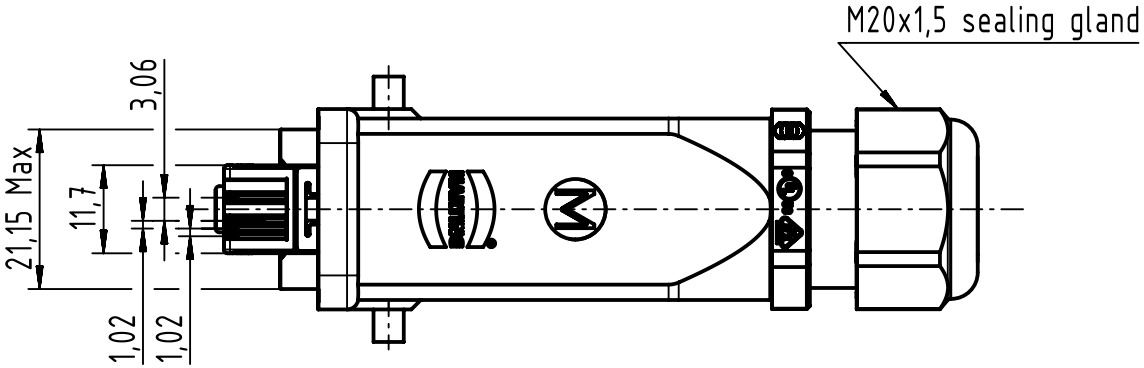

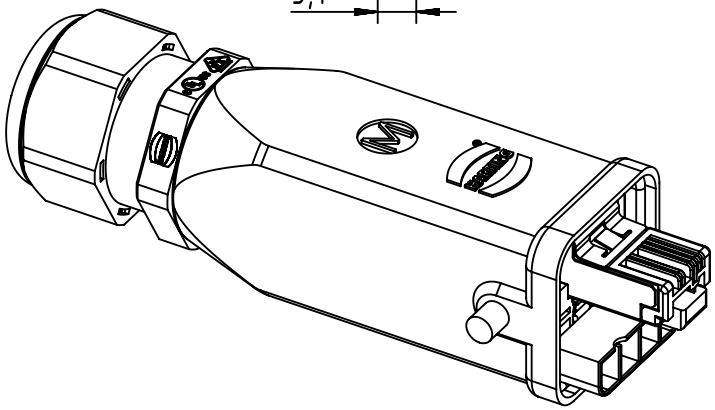

Power contact	Data contact	Performance level
Ag: 5µm over Ni	Au: 1,27µm over Ni	1

All Dimensions in mm
Original Size DIN A4

Scale 1:1

Free size tol.

Ref.

Sub.

All rights reserved

Department EC PD - RO

HARTING Electronics GmbH
D-32339 Espelkamp

Created by	Inspected by	Standardisation	Date	State
POPESCUD	PRIESTER	HOFFMANN	2017-11-23	Final Release

Title Han3A RJ45 Hybrid Cat5 plug 4+4p IDC

Doc-Key / ECM-Nr.
100220499/UGD/001/D
500000128228

Type TB

Number 09451251300

Rev. D

Page 1/1

A4