CCS Artsign 75 P MRC

Anleitung instruction
Gebrauch ○ for use
Montage ⊠ for mounting

ZUMTOBEL

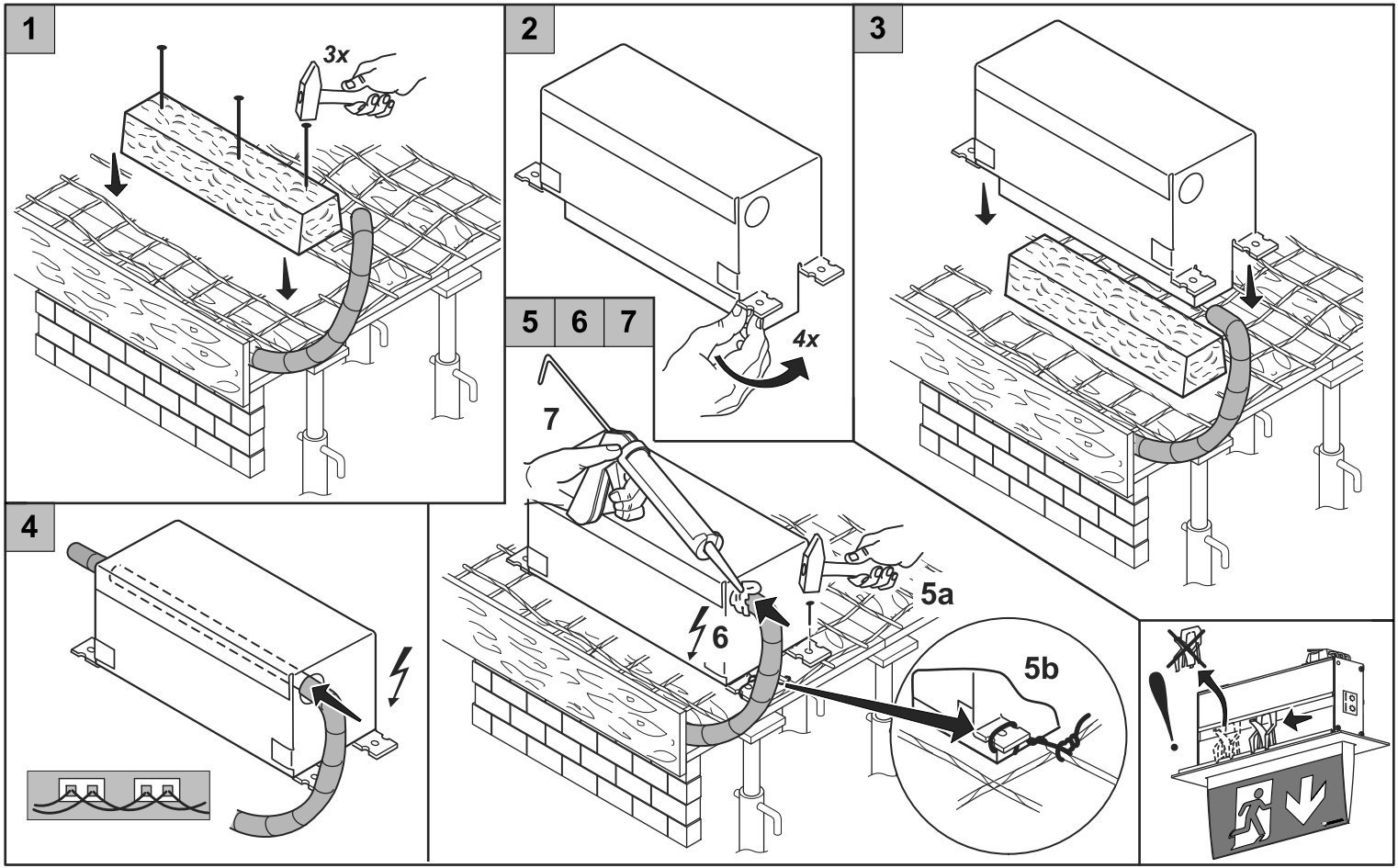

00156889/5/P-/LG/01.2019

CCS Artsign 75 P MRW

Anleitung instruction
Gebrauch ○ for use
Montage ⊠ for mounting

ZUMTOBEL

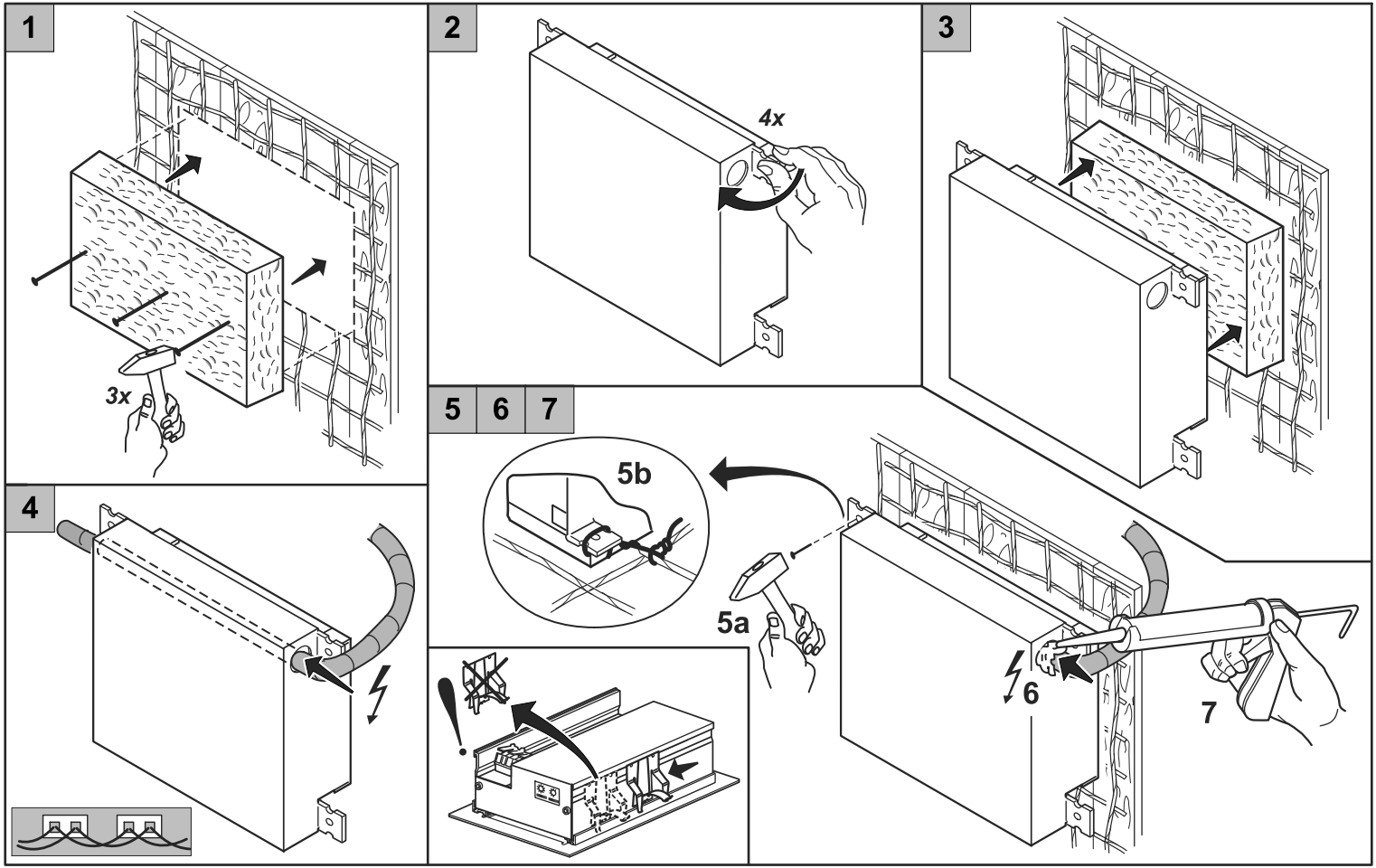

00156889/5/P-/LG/01.2019