panel mounting appliance inlet - with closure cap

Product description	
BALS-Prd.-Nr	2604
EAN	4024941026048
Product category	Surface mounting appliance inlet
Current	32A
Number of poles	5p
Arangement of phases	3p+N+PE
Position of earth contact	6 h
Voltage	200/346 - 240/415V~
Frequency	50/60Hz

Bals-Polska Elektrotechnika Sp. Z o.o. ul. ubniaska 4a, 46-024 Brynica PL
phone: +48 77 4016 210 / fax: +48 77 4016 215 / email: kontakt@bals.pl

Product description	
Protection degree	IP67
Colour code	red RAL 3000
Colour of appliance	Bayonet ring grey RAL 7035, Enclosure grey RAL 7035, Collar red RAL 3000, Closure cap grey RAL 7035
Connection design	with screw terminal
Maximum conductor size	6,0 qmm
Cable entry	other
Height	144mm
Width	100mm
Depth	125mm
Flange size vertical in mm	75mm
Flange size horizontal in mm	90mm
Drill hole dist. vertical mm	45mm
Drill hole dist. horizontal mm	78mm
Material of enclosure	Polyamide
Contacts	the contacts are brass nickel plated, The contact carrier is made of polyamide

Additional technical properties	
	With closure cap

Logistics data	
Weight/pcs	0.404 kg / Piece

Bals-Polska Elektrotechnika Sp. Z o.o. ul. ubniaska 4a, 46-024 Brynica PL
phone: +48 77 4016 210 / fax: +48 77 4016 215 / email: kontakt@bals.pl

Logistics data	
Packaging	Bag
Content amount	1 ST
EAN	4024941026048
Length	125 mm
Width	100 mm
Height	144 mm
Weight	0.405 kg
Volume	1,800 ccm
Packaging	Carton
Content amount	10 ST
EAN	4024941968973
Length	330 mm
Width	216 mm
Height	260 mm
Weight	4.266 kg
Volume	17,062.5 ccm

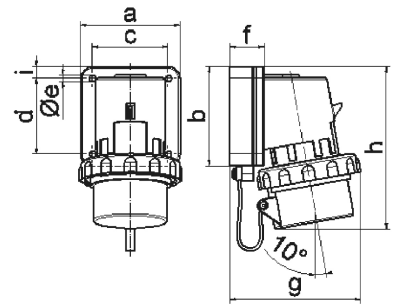

5 MB 3

Ampere Polzahl	16 3	16 4	16 5	32 3	32 4	32 5
a	74,0	75,0	84,0	90,0	90,0	90,0
b	84,0	100,0	84,0	75,0	75,0	75,0
c	58,0	62,0	64,0	78,0	78,0	78,0
d	64,0	74,0	64,0	45,0	45,0	45,0
e ø	5,5	4,3	5,5	5,5	5,5	5,5
f	12,0	12,0	29,0	29,0	29,0	29,0
g	80,0	88,0	111,0	123,0	123,0	123,0
h	133,0	152,0	134,0	147,0	147,0	148,0
i	-	-	10,0	13,0	13,0	13,0
Leiter mm² min	1	1	1	2,5	2,5	2,5
Leiter mm² max	2,5	2,5	2,5	6	6	6

Bals-Polska Elektrotechnika Sp. Z o.o. ul. ubniaska 4a, 46-024 Brynica PL
phone: +48 77 4016 210 / fax: +48 77 4016 215 / email: kontakt@bals.pl