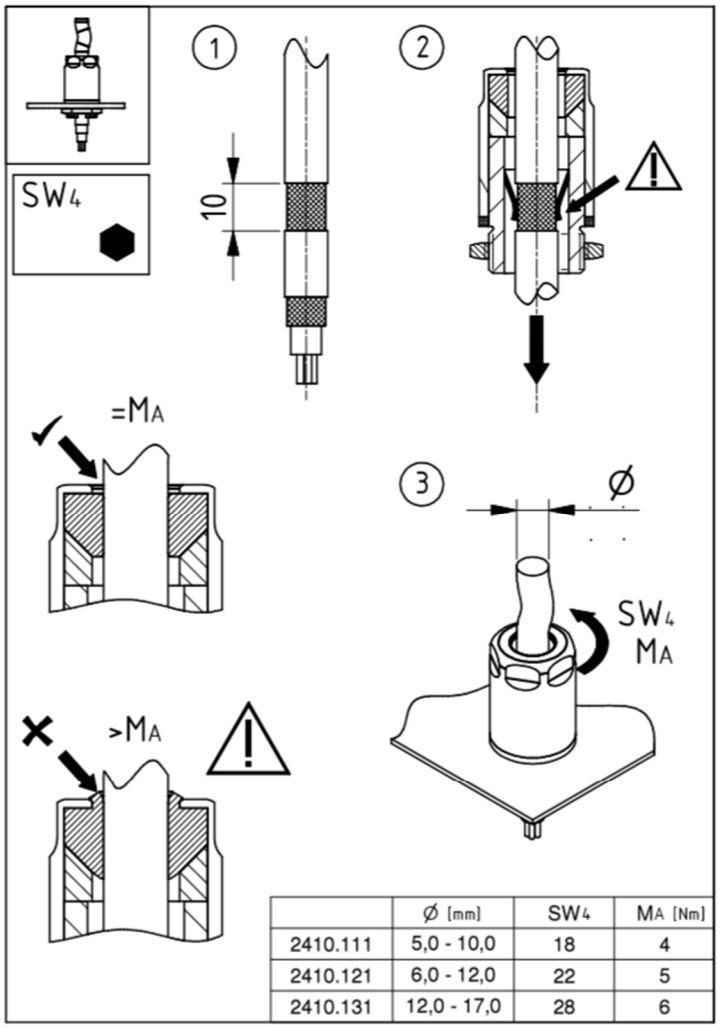

	Ø [mm]	SW4	MA [Nm]
2410.111	5,0 - 10,0	18	4
2410.121	6,0 - 12,0	22	5
2410.131	12,0 - 17,0	28	6

HD

2410.111
2410.121
2410.131

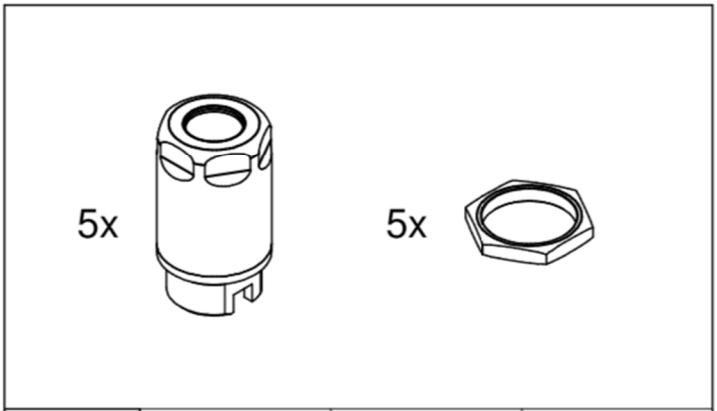

	2410.111	2410.121	2410.131
	M16x1,5	M20x1,5	M25x1,5
Ø [mm]	5,0 - 10,0	6,0 - 12,0	12,0 - 17,0

Zchng.-Nr. / No. of dwg. : A08831500HD
Versandbeutel-Nr. / No. of accessory bag :
Lieferanten-Nr. / No. of supplier :

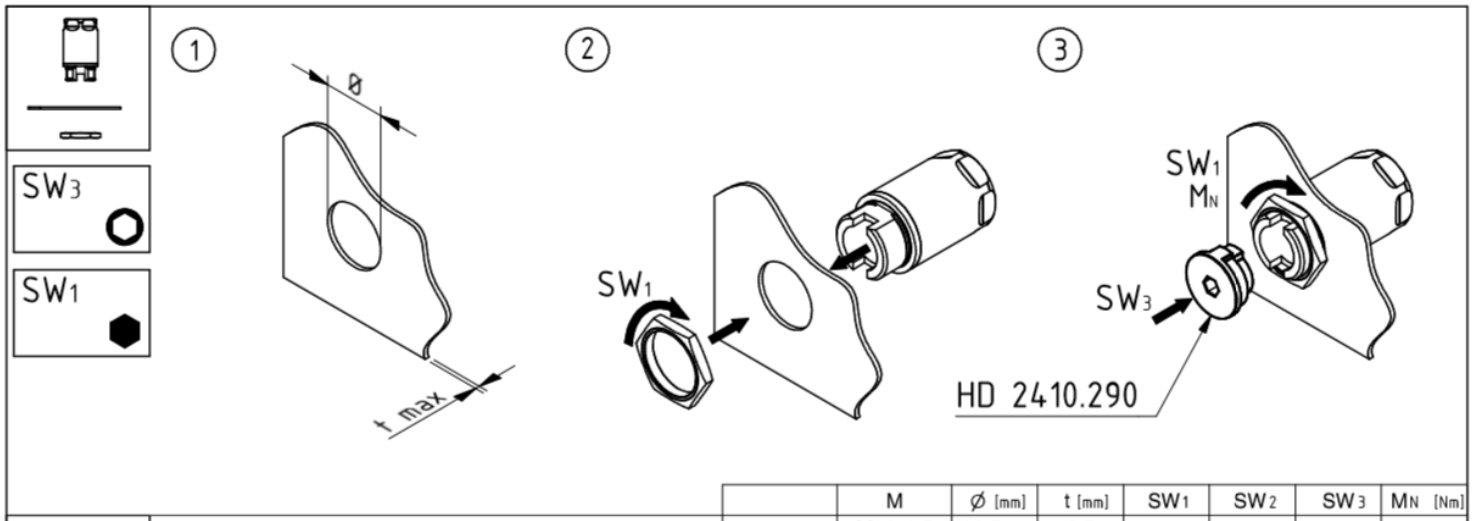
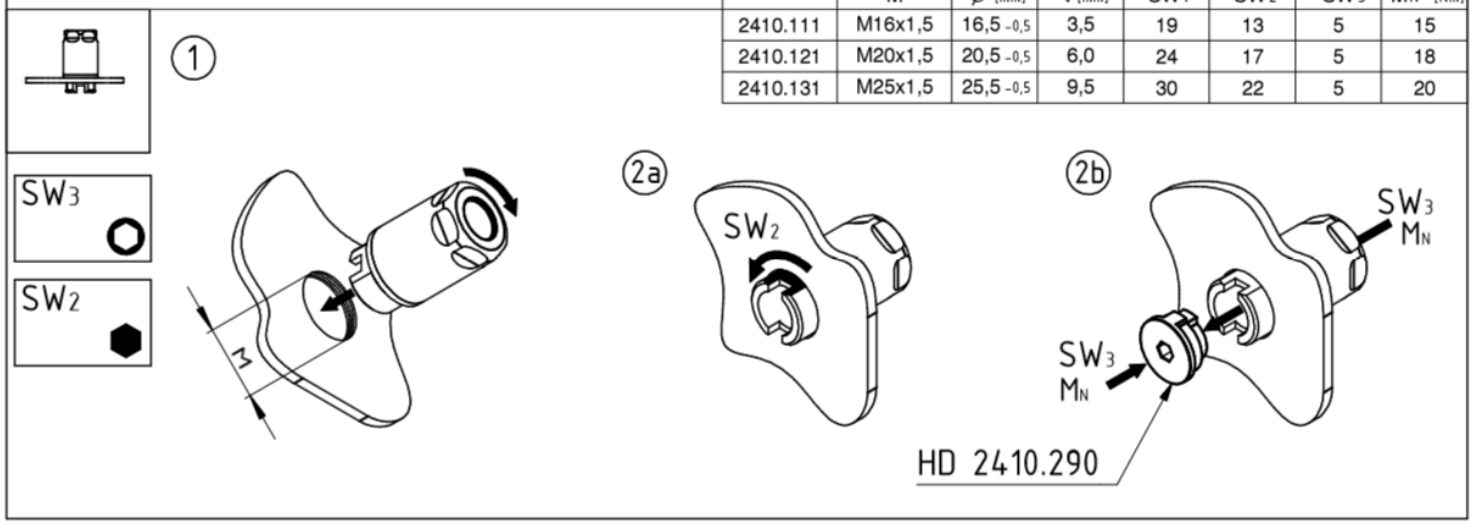
	M	Ø [mm]	t [mm]	SW1	SW2	SW3	MN [Nm]
2410.111	M16x1,5	16,5 -0,5	3,5	19	13	5	15
2410.121	M20x1,5	20,5 -0,5	6,0	24	17	5	18
2410.131	M25x1,5	25,5 -0,5	9,5	30	22	5	20