Specification

Customer's Name: _____

Product Material No. : _____

Model No. : LF-GSD040YC

Version: V1.5

Customer Approval

Examined by	Reviewed by	Approved by

LIFUD Approval

Drafted by	Reviewed by	Approved by
Yang Ru	Sun Dihong	Luo Laizhu

Full Model Numbers Required by the Customer

Full model No.		**Full model No.**	
Full model No.		**Full model No.**	

E.C. List

Version	Description of Change	R&D	Date
1.0	Formal release	Shi Xiongguo	10 MAY 2019
1.1	Revised	Yang Ru	13 AUG 2019
1.2	Upgraded parameters	Yang Ru	4 SEP 2019
1.3	Revised the wiring description of the push dimming	Yang Ru	19 DEC 2019
1.4	Added the introduction of synchronous dimming	Yang Ru	19 MAR 2020
1.5	Revised the data of the Rx dimming and description of the storage and the DIP switch.	Yang Ru	22 APR 2020

Lifud Technology Co., Ltd.
Building B, Kutto Industrial Park, No.26 Xinhe Road, Xinqiao Street, Bao'an District, Shenzhen, China 518104
www.lifud.com

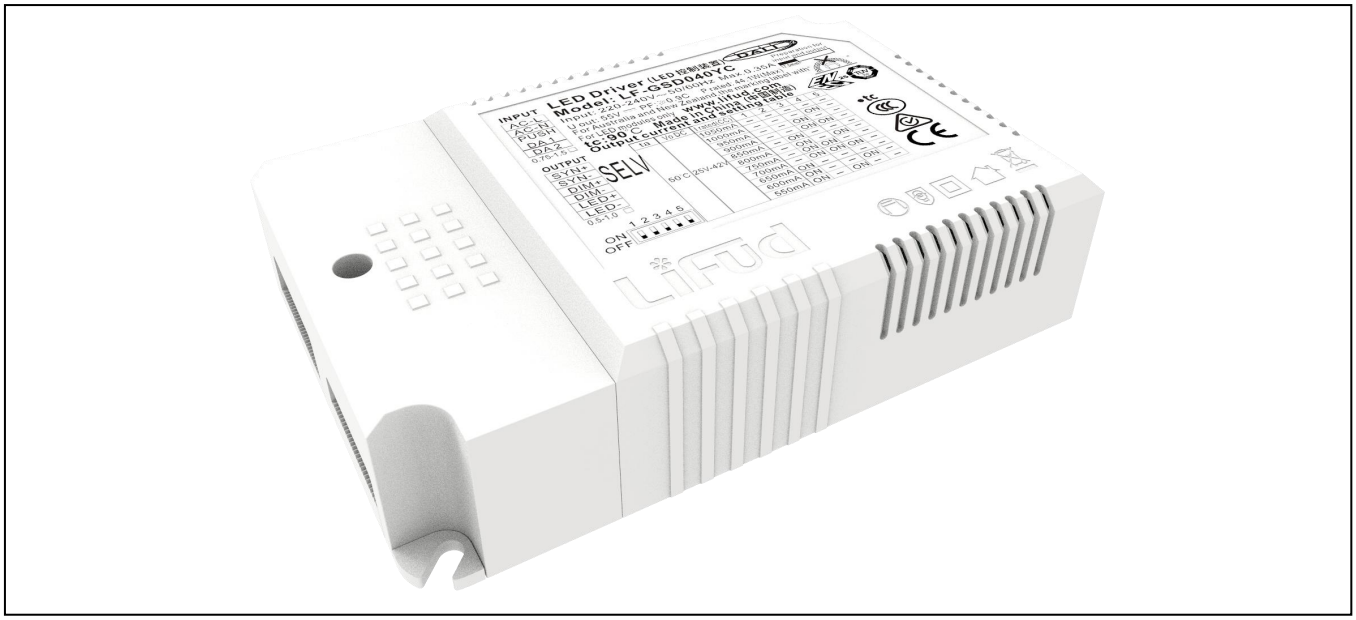

Product Description

LF-GSD040YC series is a 40W constant current LED driver with five dimming functions in one, including DALI dimming, push dimming, 0-10V dimming, PWM dimming and Rx dimming. Its input voltage limit is 198-264VAC. Its output current can be selected from 550mA to 1050mA via the DIP switch, 50mA every step. It conforms to DALI 2.0 compatibility certification including IEC 62386-101, 102, 207.

Product Feature

- Constant current output. The current value can be selected via a DIP switch, 50mA every step.
- Plastic casing. Suitable for the Class I and Class II light fixtures
- Built-in active power factor correction function
- Stand-by power consumption less than 0.5W
- DALI dimming. The logarithmic dimming and the linear dimming curve are optional.
- Push dimming
- Synchronous dimming: up to 10 drivers share one IP address
- Warranty: 7 years (Please refer to the warranty condition.)

Application

- Plant lighting
- Indoor office lighting
- Decorative lighting
- Commercial lighting
- Residential lighting
- Flood light

Technical Data

Full Model Number		LF-GSD040YC
Output	Output Voltage	25-42V
	Output Current	The output current is selectable via a DIP switch. Refer to the DIP switch table. 550 mA / 600 mA / 650 mA / 700 mA / 750 mA / 800 mA / 850 mA / 900 mA / 950 mA / 1000 mA / 1050 mA
	Ripple Voltage	<1V@20MHz
	Percent Flicker	Meet standards of CIE SVM (≤0.4%) and IEC PST (≤1%)
	Current Tolerance	±5%
	Temperature Drift	±10%
	Line Regulation	±5%
	Start-up Time	<1s @230VAC
Input	Line Regulation	±5%
	Input Voltage	220-240VAC (voltage limit : 198-264VAC)
	DC Input Voltage	310-340VDC (voltage limit : 280-374VDC)
	Input Frequency	47Hz-63Hz
	Input Current	0.35A Maximum
	Power Factor	≥0.95@230VAC (LED load)
	Total Harmonic Distortion	≤15%
	Efficiency	≥88% @230VAC
	Inrush Current	≤47.6A&161uS@230VAC (Maximum)
	Qty of the same model of drivers that can be configured by a circuit breaker	Under the condition of 230VAC, the total quantity of the same model of power supply that can be configured by a type-B 16A circuit breaker is 18 pieces.
	Leakage Current	≤0.7mA
	Stand-by Power Consumption	≤0.5W (when the OFF signal of DALI takes effect)
Protective Feature	Open-Circuit Protection	<55V
	Short-Circuit Protection	Hiccup mode (auto-recovery)
Environment Condition	Working Temperature	-30℃ ~ +50℃
	Working Humidity	20-90%RH (no condensation)
	Storage Temperature/Humidity	-40℃ ~ 80℃(six months under class I environment); 10-90%RH (no condensation)
	Atmospheric Pressure	86-106KPa
Safety & Norm	Certificate	TUV-ENEC, CCC, SAA, RCM, CE, CB
	Withstand Voltage	I/P-O/P: 3.75KV, 5mA, 60s
	Insulation Resistance	I/P-O/P: 500VDC, >100MΩ
	Surge Rating	IEC61000-4-5 (L-N: 1KV) Class B
	Electrical Fast Transient/Burst	1.2KV or 2.2KV (Class B)
	Safety Standard	EN 61347-2-13: 2014 / A1: 2017, EN 61347-1: 2015, EN 62384: 2016 IEC 61347-1: 2015, IE61347-2-3: 2014, IEC 61347-2-13: 2014 GB19510.1-2009, GB19510.14-2009

	Electromagnetic Interference	EN55015, EN61000-3-2
	Electromagnetic Susceptibility	EN61000-4-2, 3, 4, 5, 6, 8, 11; EN61547; IEC61000-4-13
	EMI Light Fixture Type	(Typical): panel light
	Electrostatic Discharge (ESD)	Air: 8KV; touch: 4KV (Class B)

Others

Others	IP Rating	IP20
	RoHS	RoHS 2.0 (EU) 2015/863
	Warranty Condition	7 years (Tc: 80 ℃)
	DALI Executive Standard	IEC 62386-101, 102, 207: DALI 2.0
	Noise Rating	≤ 29db (Tested in a silent room and the noise collector was 10cm away from the power supply.)
	TRIAC Dimmer	/
Testing Equipment	AC power source: CHROMA6530, digital power meter: CHROMA66202, Oscilloscope: Tektronix DPO3014, DC electronic load: M9712B, LED board, constant temperature and humidity chamber: MQ-1000-3000, lightning surge generator: Everfine EMS61000-5B, rapid group pulse generator: Everfine EMS61000-4A, spectrum analyzer: KH3935, hi-pot tester: TH9201B, light flicker analyzer: LFA-3000, etc.	
Testing Condition	Unless otherwise stated, the parameters of the power factor and efficiency are the test results under the ambient temperature of 25℃ and humidity of 50%, AC input of 230V and 100% load.	
Additional Remark	1. It is recommended that customer should install an over & under voltage protection and surge protection device to ensure safety before connecting to electricity. 2. The PC cover, housing, end caps and other parts of the LED driver inside the LED light fixture must conform to UL94 V-0 flammability standard or above. 3. As an accessory, the LED driver is not the only factor determining the EMC performance of the LED light fixture. The structure and the wiring of the light fixture are also relevant. Thus it's strongly recommended the LED light fixture manufacturer re-confirms the EMC of the whole LED light fixture.	

Circuit Breaker & Relevant Parameters

Name	Value	Remark
Surge peak current (Ipeak)	47.6A	Input voltage 230Vac
Surge half-peak time (Twidth)	161μs	Input voltage 230Vac. Measure the time for Ipeak to drop to its half value.
Quantity of the same model of driver that can be configured by a type-B 16A circuit breaker.	18 pcs (max.)	

Driver quantities are below if use another type of circuit breaker.

Type	Rank	Qty of accommodated drivers	Relative conversion ratio
B	10A	11 pcs	63%
	13A	15 pcs	81%
	16A	18 pcs	100% (benchmark)
	20A	23 pcs	125%
	25A	28 pcs	156%
C	10A	19 pcs	104%
	13A	24 pcs	135%
	16A	31 pcs	170%
	20A	37 pcs	208%
	25A	47 pcs	260%

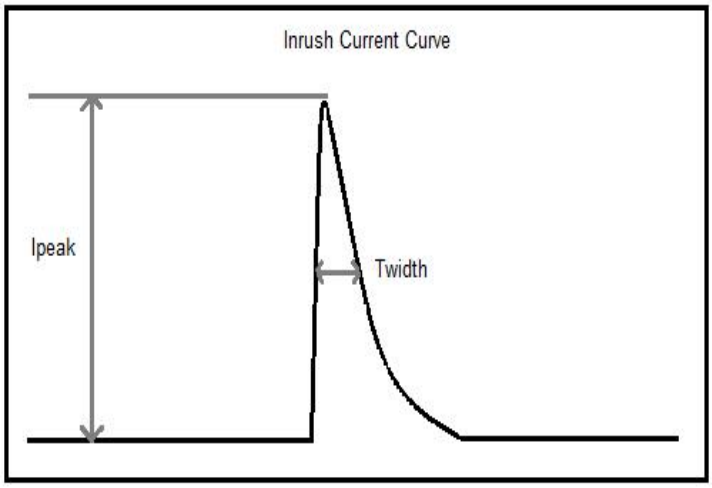

Function Diagram

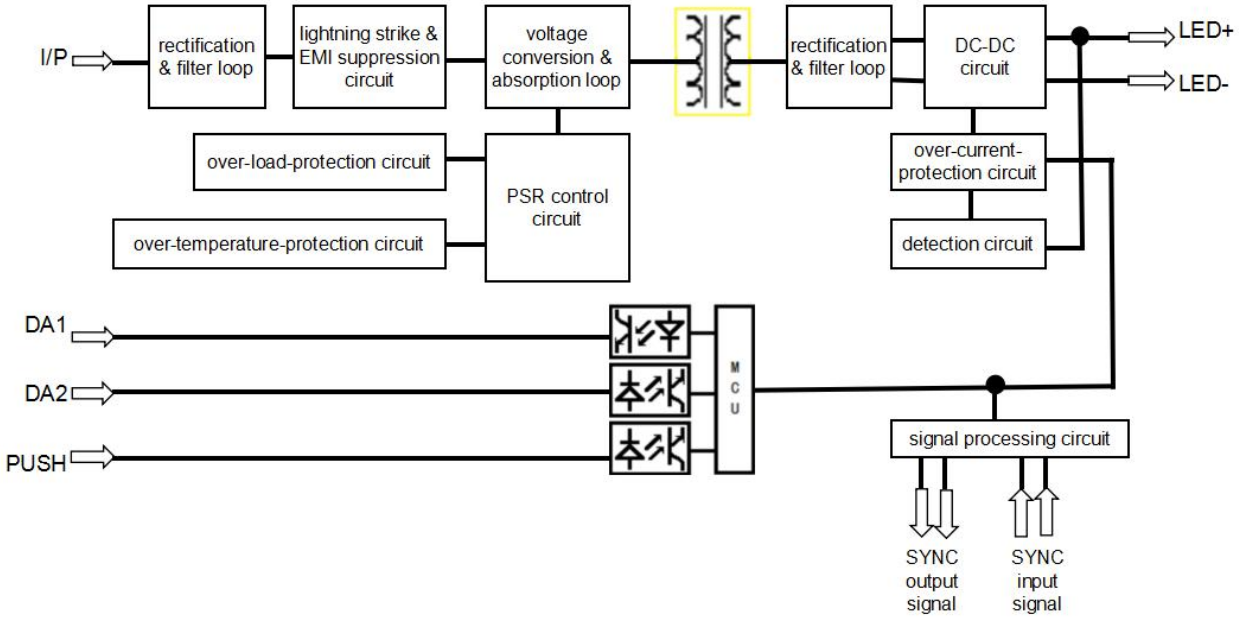

DIP Switch Table

DIP switch setting							
Ta	Vo DC	Current	1	2	3	4	5
50℃	25V~42V	1050mA	—	—	—	—	—
		1000mA	—	—	—	ON	—
		950mA	—	—	ON	—	—
		900mA	—	—	ON	ON	—
		850mA	—	ON	—	—	—
		800mA	—	ON	—	ON	—
		750mA	—	ON	ON	—	—
		700mA	—	ON	ON	ON	—
		650mA	ON	—	—	—	—
		600mA	ON	—	—	ON	—
		550mA	ON	—	ON	—	—

Remark: The default current for all DIP switch settings is 1050mA, except for the settings mentioned above. "—" means switching "OFF".

Label

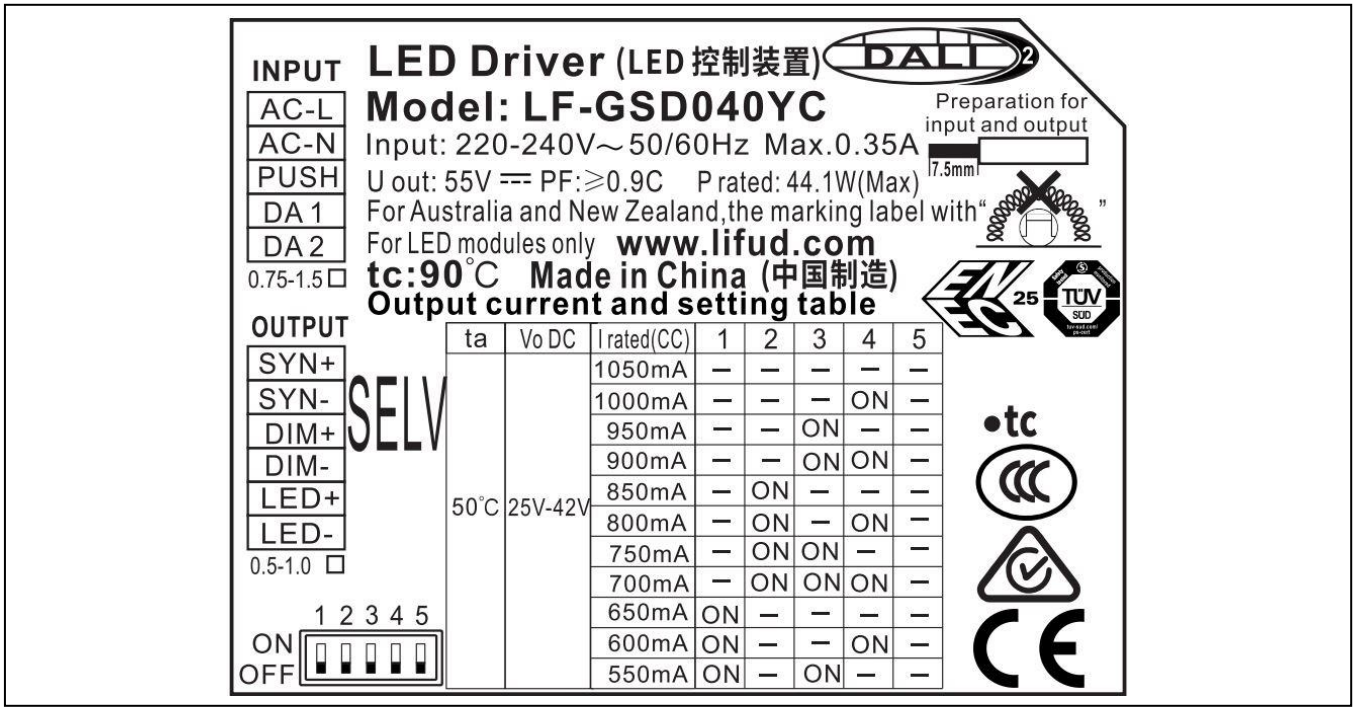

TC Spot

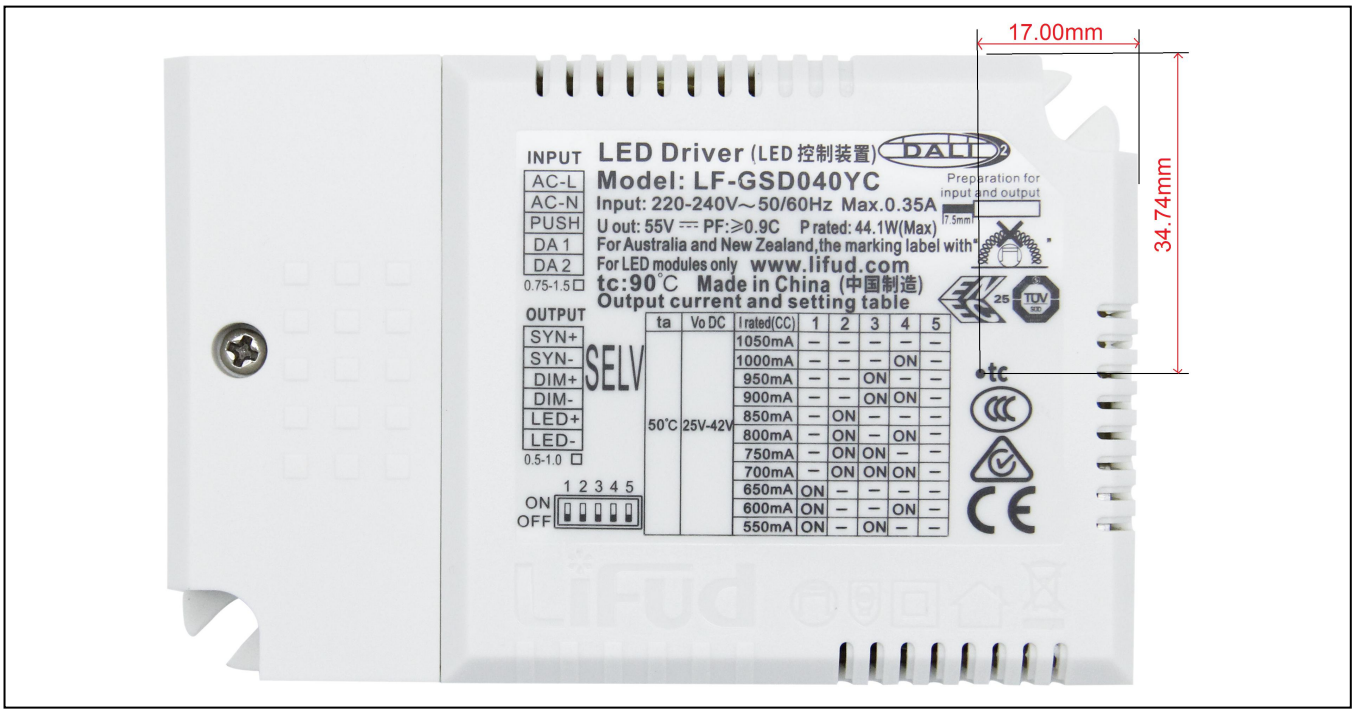

Wiring Diagram

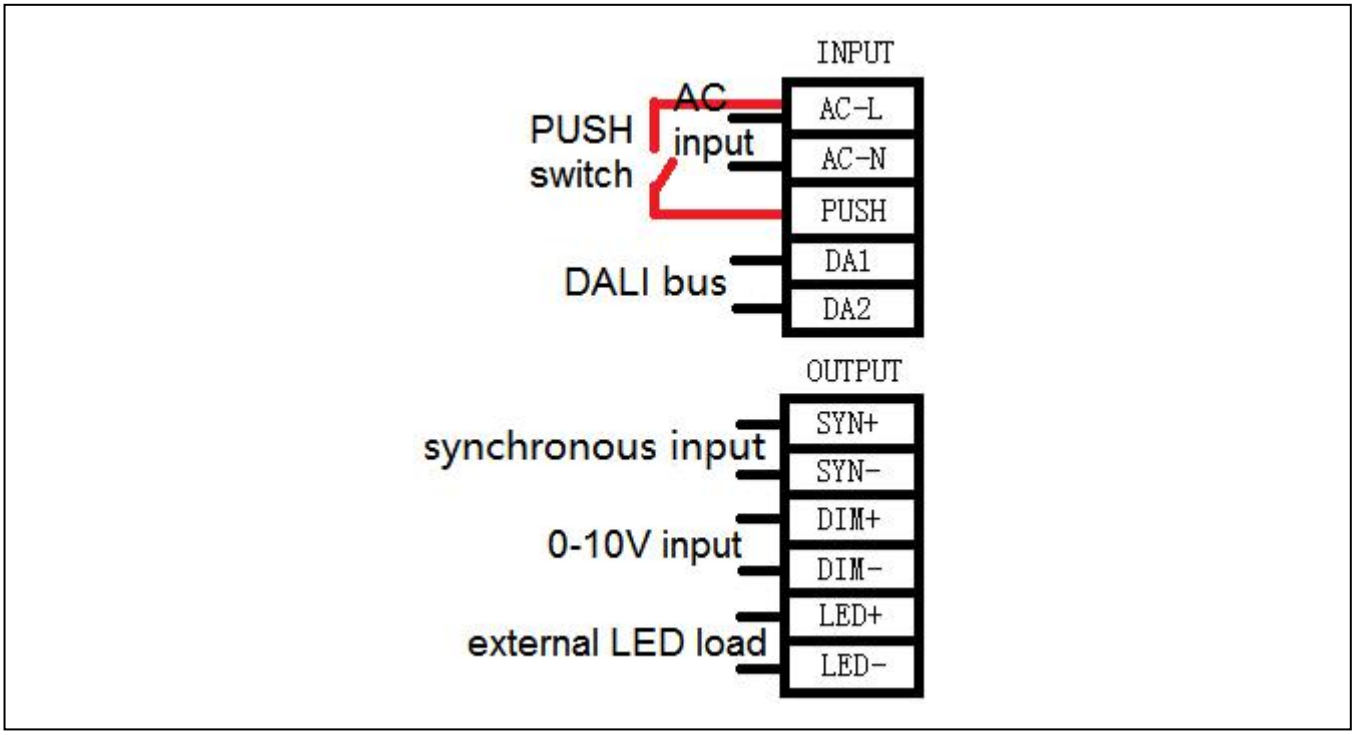

Product Feature Curve

1. PF curve

Here are the PF curves of the 550mA gear (left) and the 1050mA gear (right).

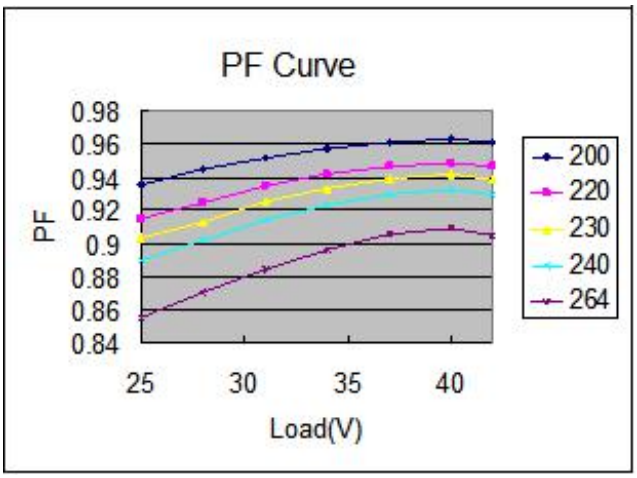

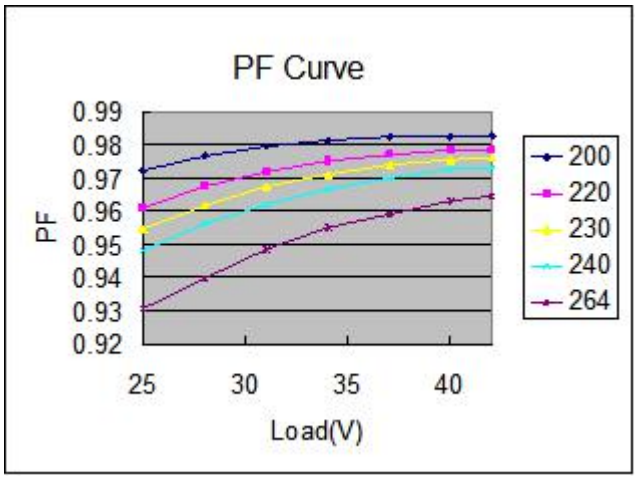

2. Efficiency curve

Here are the efficiency curves of the 550mA gear (left) and the 1050mA gear (right).

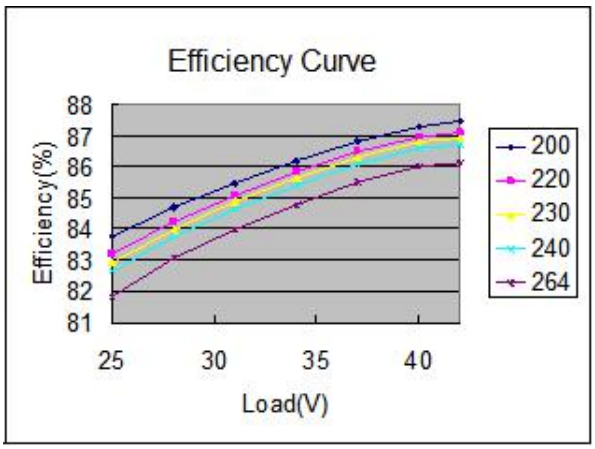

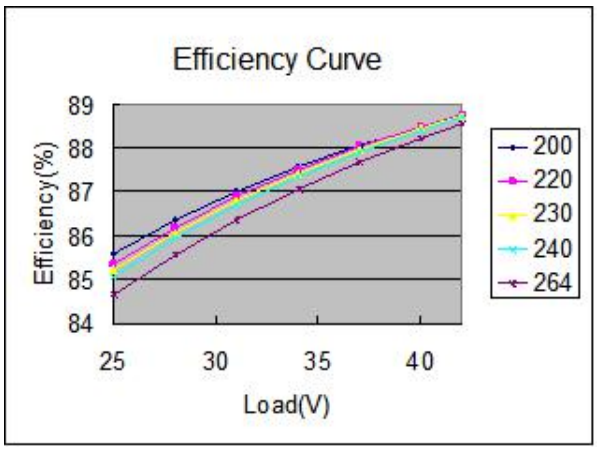

3. Lifetime curve

The curve below illustrates the driver's lifetime data when the its max. casing temperature in an airtight space reaches 40℃, 50℃, 60℃, 70℃, 80℃ and 90℃.

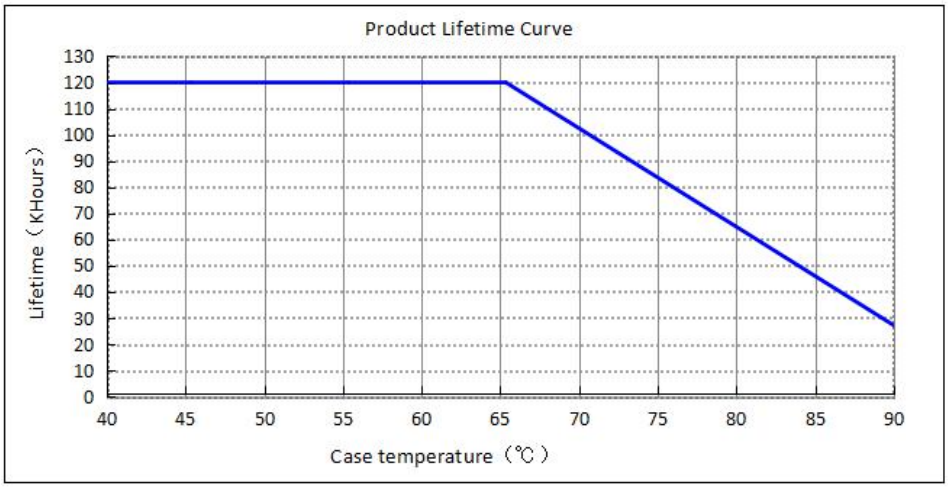

4. Dimming curve

Here are the DALI logarithmic dimming curves in the condition of 25V 550mA (left) and of 42V 1050mA (right)

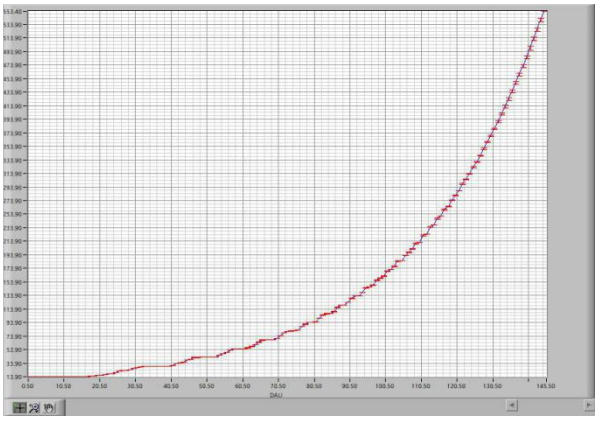

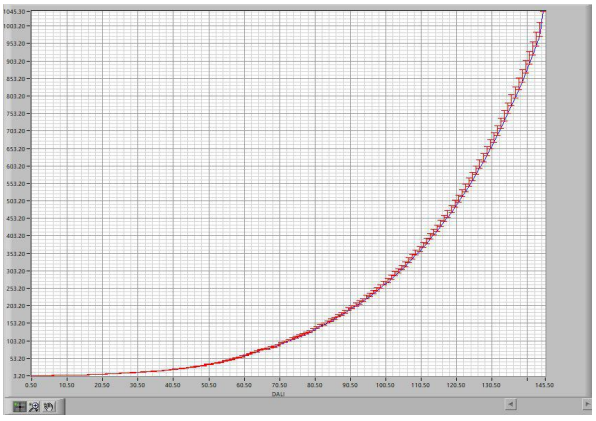

Instruction of Dimming Operation

1. Wiring diagram of push dimming

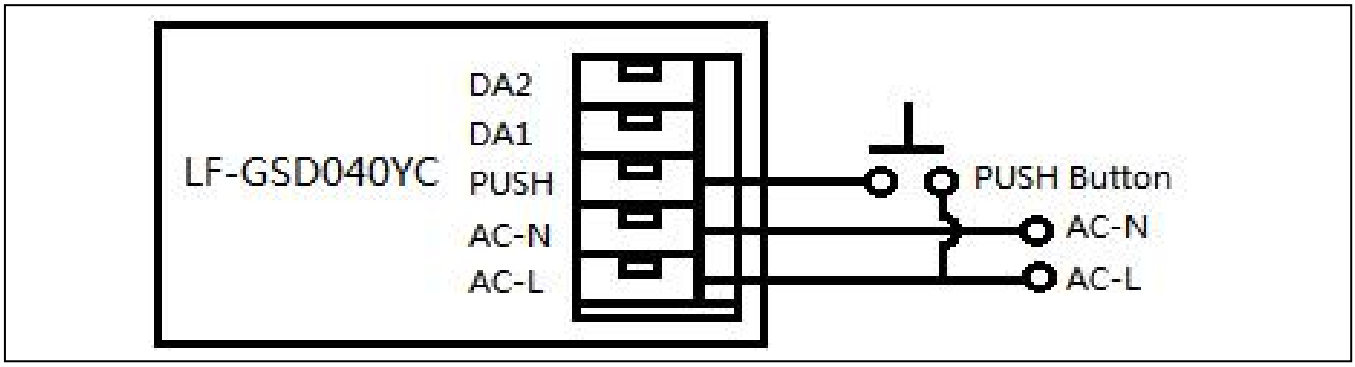

(1) Push dimming

Operation	Operation Time	Function
Instant Push	0.1 ~ 0.5 seconds	Light On / Off
Long Push	0.5 ~ 11 seconds	Brighter / Dimmer
Reset Push	> 11 seconds	Back to Brightest

(2) The push operation won't cause any variation if it's less than 0.1 second.

(3) When controlling via the same button, in 0-10V mode, up to 10 drivers can be connected in parallel. In DALI & push dimming mode, using SYNC DIM connection, there can be up to 640 drivers connected in parallel.

(4) The button can only be connected to the AC-L and the PUSH terminals of LF-GSD040YC. Connecting to AC-N will cause the push dimming function failure. ⚠

(5) The minimum dimming depth of the push dimming is 4% (Iout).

(6) The push dimming mode has memory function in case of power failure. Power up the driver again and the light will returned to the state before the power failure.

(7) In push dimming mode, the current dimming direction is opposite to the previous dimming direction.

2. DALI dimming

(1) Connect DALI signal to the DA1 and DA2 terminals.

(2) DALI protocol includes 16 groups and 64 IP addresses.

(3) The minimum dimming depth of the DALI dimming is 2% (Iout).

3. 0-10V, PWM & Rx dimming

(1) 0-10V, PWM and Rx signals should be connected to the DIM terminal.

(2) In 0-10V mode, the light turns off when the input voltage is below 0.3V and turns on when it's above 0.5V.

(3) The minimum dimming depth of the 0-10V dimming is 5% (Iout).

(4) 0-10V dimming

Dimming voltage	≤0.3V	1V	2V	3V	4V	5V	6V	7V	8V	9V	10V
Rated current percentage	OFF	10%	20%	35%	45%	60%	70%	80%	90%	100%	100%

(5) PWM dimming

PWM signal	0%	10%	20%	30%	40%	50%	60%	70%	80%	90%	100%
Rated current percentage	OFF	20%	40%	50%	65%	75%	90%	95%	100%	100%	100%

(6) Rx dimming

Resistance	0K	10K	20K	30K	40K	50K	60K	70K	80K	90K	100K
Rated current percentage	OFF	30%	50%	65%	75%	80%	85%	90%	95%	100%	100%

Remark: Factory default setting is 100% luminance.

4. Synchronous dimming

(1) Maximum 10 pcs of LF-GSD040YC can be dimmed synchronously (one master and nine slaves). The maximum wire length between two products is 15m. The maximum wire length between the master and the farthest slave is 135m. Wire diameter: 16-22AWG.

(2) The method of switching to synchronous dimming: choose a driver as a master and switch the fifth gear on the DIP switch to ON.

(3) The master can directly control slaves via DALI and push dimming signals to realize synchronous dimming function.

(4) Wiring diagram of synchronous dimming:

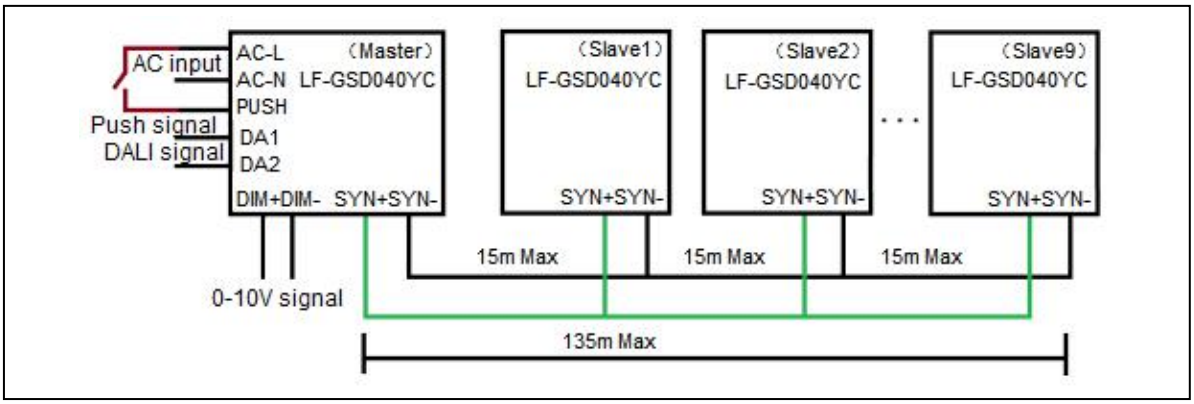

(5) Before using synchronous dimming function, make sure all LF-GSD040YC are at 100% output.

(6) When the synchronous dimming signal is withdrawn from the slaves, the slaves enter DALI mode by default.

5. Switch between dimming modes

(1) Switch to DALI dimming

After powering up the driver for two seconds, press the DALI dimmer for ON/OFF operation. And then it becomes DALI dimming mode.

(2) Switch to push dimming

After powering up the driver for two seconds, long press the push switch for over three seconds. And then it becomes push dimming mode.

(3) Switch to 0-10V dimming

After powering up the driver for two seconds, adjust the 0-10V dimmer, from the brightest state to the dimmest state or the opposite. One second later, it becomes 0-10V dimming mode.

Remark: In order to switch the DALI mode to another mode, the light must be on. It's a default setting that when the light is off, the DALI dimming mode cannot be switched to another mode.

Dimension (unit: mm, tolerance: +0.5mm)

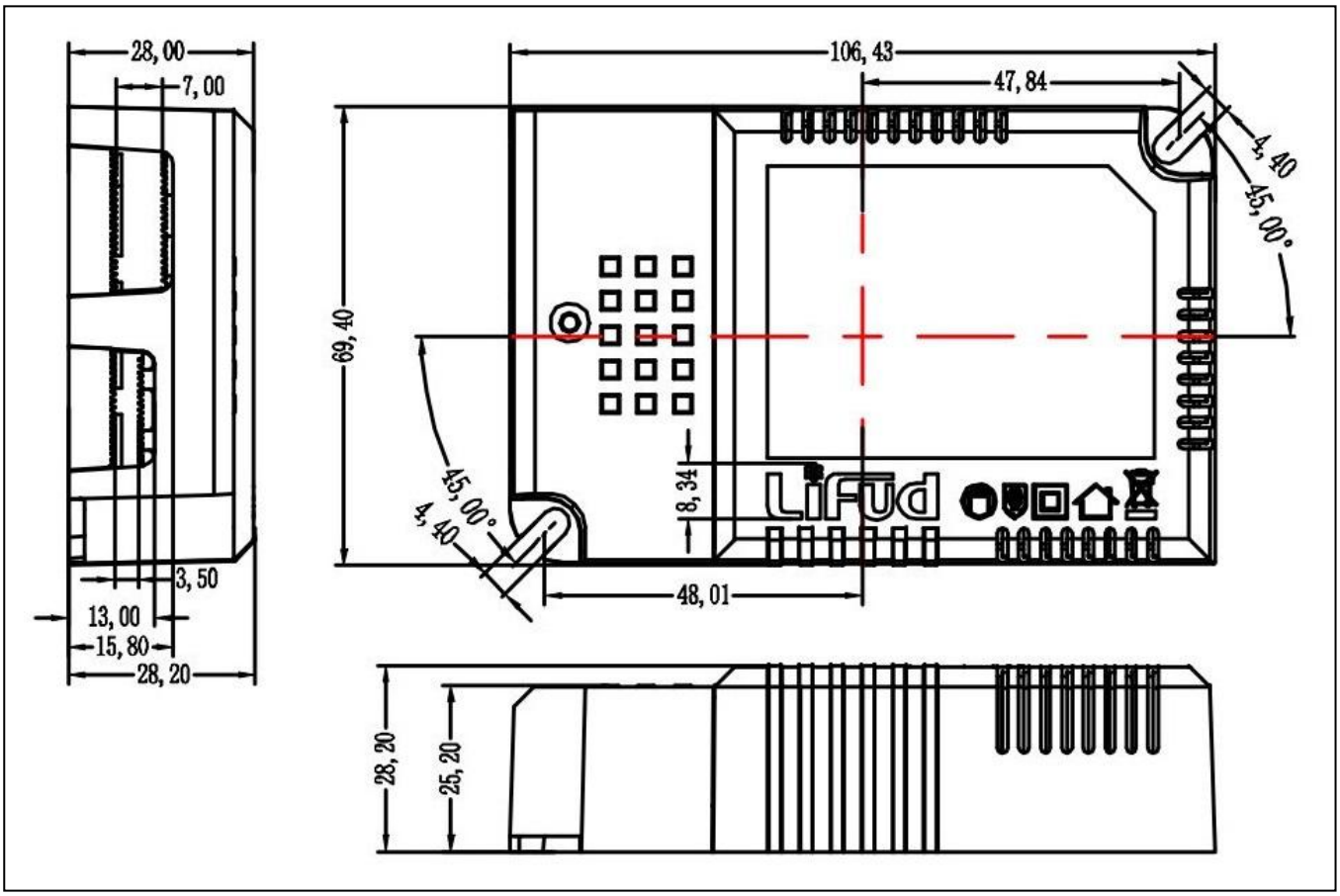

Packaging Specification

Model	LF-GSD040YC
Packaging dimension	385×285×210mm (L×W×H)
Quantity	9 pcs /layer; 6 layers /ctn; 54 pcs /ctn
Weight	0.1636 Kg /pc; 9.82 Kg /ctn

Transportation & Storage

1. Transportation: by means of vehicles, boats and aircraft.

2. In transportation, there should be awnings for rain and sun protection. Civilized loading and unloading are required. There should be no severe vibration or impact.

3. The storage should be in accordance with the provisions of the Class I environment. Products which have been stored for more than six months must be re-inspected. Use them only after passing the re-inspection.

Attention

1. Use this product according to the specifications, please. Otherwise there may be malfunction.

2. Use luminaires that have not been certified or are not compatible with the drivers may cause fire, explosion or other hazards.

3. Man-made damage is not covered by warranty.

Remark: The final interpretation right of contents of this data sheet belongs to Lifud Technology Co., Ltd.